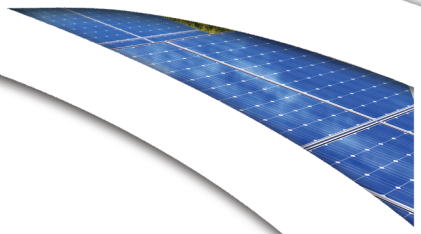

HPS Imperator™

Encapsulated Industrial Control Transformers

power to perform

Hammond Power Solutions

HPS Imperator

Encapsulated Industrial Control Transformer

INNOVATIVE DESIGN

The HPS Imperator series is a unique innovative and compact design that provides the ideal solution for any industrial control application.

The HPS Imperator's unique terminal block design allows for the quick and easy installation of standard secondary or optional primary 13/32" x 1 1/2" midget/type CC fuse clips on every unit. This is the simplest and most inexpensive fusing installation provided on any industrial control transformer in the market today.

The windings and internal terminations of the HPS Imperator are encapsulated which protects them from moisture, dirt and other airborne contaminants. The custom molded coil covers, with their unique 'fin shaped' design, combine superior transformer cooling properties with a clean bold look.

The HPS Imperator utilizes custom serrated terminals, in combination with standard SEMS washer screws, making connections quicker to install; and provides superior connection strength when connecting with bare, solid or stranded wire. It also allows for ring or spade termination connectors.

THE PERFECT SOLUTION

The HPS Imperator series of industrial control transformers are specifically designed to meet the high inrush current levels where electromagnetic components such as relays, solenoids and magnetic motor starters are used.

With 11 standard voltage groups, a VA range from 50VA to 1500VA and available with standard secondary and optional primary fuse kits, the HPS Imperator series provides the perfect solution for any application.

SUPERIOR QUALITY & VALUE

The HPS Imperator series design, utilizing superior insulation systems and being constructed with high quality silicon steel laminations for optimum performance, meet or exceed UL, CSA and CE standards.

Backed by an industry leading LIFETIME warranty, the HPS Imperator industrial control transformer line offers superior performance, quality and value.

APPLICATIONS

Process Controls

Panel Shops

Machine Automation

Control Boards

HVAC Panels

Power Timers, Solenoids and Controllers

INDUSTRIES

Paper Mills

Printing

Automotive

Packaging Systems

Process Automation

APPROVALS

- UL Listed (Approved for U.S. and Canada)
- CE Mark standard on all units
- RoHS Compliant

Hammond Power Solutions

FEATURES AND BENEFITS

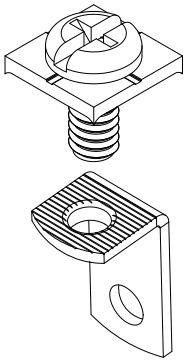

- 600V class, rated industrial control transformers
- 11 standard multi primary and secondary voltage groups available[1]
- 50/60 Hertz (60Hz on PH***AJ & PH***AR)
- VA range from 50 up to 1500[1]
- Robust insulation system:
  - 50-150VA, temperature rise 55°C, insulation class 130°C
  - 250-1500VA, temperature rise 80°C, insulation class 130°C
- Constructed with high quality silicon steel laminations that provide optimum performance and reliability
- Encapsulated coils encased in a custom injection molded cover, protect coils and terminations from moisture, dirt and other industrial airborne contaminants
- Mounting Feet: made of heavy steel and welded or bolted to the core, these mounting feet provide superior strength in a compact design
- Termination: combination slot/Phillips #6 screw, complete with SEMS washer (suitable for 18 AWG to 14 AWG solid or 14 AWG stranded wire)
- Standard SEMS washers - supplied on all units[2]
- Standard secondary fuse kits -utilizing 13/32" x 1 1/2" midget/type CC fuse clips (supplied with all units)
- Optional primary fuse kits available utilizing 13/32" x 1 1/2" midget/type CC fuse clips
- Optional finger safe terminal covers available on all units
- LIFETIME Warranty (Limited)

[1] special voltages and VA sizes available upon request
[2] excluding PH750PG, PH1000PG, PH750MLI, PH1000MLI

Terminal connection numbers molded into terminal block and correspond to nameplate and wiring diagrams, make connecting the HPS Imperator quick and simple.

SEMS washer allows for easy connection of supply or load wires with or without terminal connectors

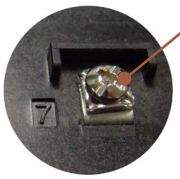

Standard secondary and optional primary fuse kits utilizing 13/32" x 1 1/2" midget/type CC fuse clips provide an economical solution to your fusing requirements (fuses not supplied).

Innovative terminal block design provides for easy hook-up and installation of fuse clips.

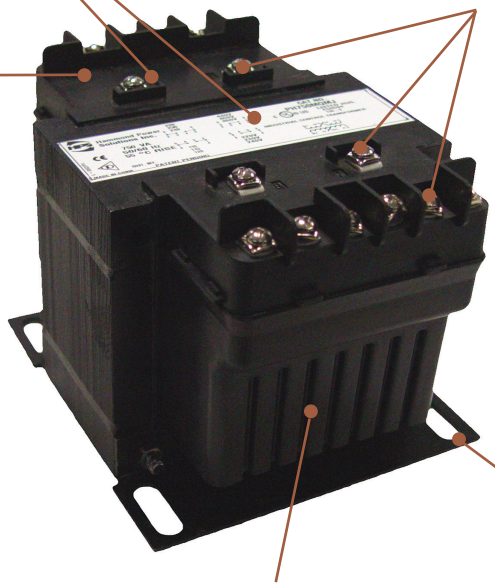

Optional removable finger safe terminal covers available on all standard units.

Made of heavy steel and welded or bolted to the core, these mounting feet provide superior strength in a compact design.

Custom injection molded coil cover with its unique "fin shaped" design combine superior cooling properties with a clean, bold look.

HPS Imperator

Encapsulated Industrial Control Transformer

GROUP A

Primary Voltage:	**600**	575	550
Secondary Voltage:	**120 x 240**	115 x 230	110 x 220

60 Hertz

VA Rating	Catalog Number	Mtg. Fig.	Output Amps	Overall Dimensions			Mounting Centers		Mounting Slot	Height with Finger Guard	Depth with Finger Guard	Approx. Ship Weight Lbs.	Optional Primary Fuse Kit P/N
				A	B	C	D	E	G X H				
50	**PH50AJ**	A	0.42/0.21	3.00	3.81	3.19	2.50	2.25	0.22 x 0.44	4.00	5.25	2.70	PFK1
75	**PH75AJ**	A	0.63/0.31	3.25	3.69	3.56	2.63	2.50	0.22 x 0.44	4.37	5.13	2.80	PFK1
100	**PH100AJ**	A	0.83/0.42	3.25	4.06	3.63	2.63	2.63	0.22 x 0.44	4.44	5.50	4.10	PFK1
150	**PH150AJ**	B	1.25/0.63	4.00	4.63	3.81	3.38	2.75	0.22 x 0.75	4.50	6.13	4.90	PFK2
250	**PH250AJ**	B	2.08/1.04	4.50	5.25	3.81	3.75	3.13	0.22 x 0.75	4.50	6.75	6.97	PFK2
350	**PH350AJ**	B	2.92/1.46	4.50	4.88	4.44	3.75	3.75	0.22 x 0.75	5.18	6.38	8.30	PFK3
500	**PH500AJ**	B	4.17/2.08	4.75	5.56	4.31	4.06	3.44	0.31 x 0.94	5.13	7.06	11.6	PFK3
750	**PH750AJ**	B	6.25/3.13	5.13	6.38	4.31	4.38	4.00	0.31 x 0.81	5.13	7.88	16.6	PFK3
1000	**PH1000AJ**	B	8.33/4.17	5.25	6.50	4.94	4.50	4.09	0.31 x 0.81	5.56	8.00	21.0	PFK3
1500	**PH1500AJ**	B	12.5/6.25	5.25	7.56	4.94	4.50	5.44	0.38 x 1.00	5.56	9.06	30.0	PFK3

Secondary fuse clips, fuse clip mounting screws and primary and secondary voltage links/jumpers supplied standard with transformers.
Please refer to page 11 for dimensional drawings. Special voltages and VA sizes available upon request.

All dimensions in inches

GROUP B

Primary Voltage:	**600**	575	550
Secondary Voltage:	**12 x 24**	11.5 x 23	11 x 22

60 Hertz

VA Rating	Catalog Number	Mtg. Fig.	Output Amps	Overall Dimensions			Mounting Centers		Mounting Slot	Height with Finger Guard	Depth with Finger Guard	Approx. Ship Weight Lbs.	Optional Primary Fuse Kit P/N
				A	B	C	D	E	G X H				
50	**PH50AR**	A	4.17/2.08	3.00	3.81	3.19	2.50	2.25	0.22 x 0.44	4.00	5.25	2.70	PFK1
75	**PH75AR**	A	6.25/3.13	3.25	3.69	3.56	2.63	2.50	0.22 x 0.44	4.37	5.13	2.80	PFK1
100	**PH100AR**	A	8.33/4.17	3.25	4.19	3.63	2.63	2.63	0.22 x 0.44	4.50	5.63	4.50	PFK1
150	**PH150AR**	B	12.5/6.25	4.00	4.94	3.81	3.38	2.75	0.22 x 0.75	4.50	6.44	5.70	PFK2
250	**PH250AR**	B	20.8/10.4	4.50	5.44	3.81	3.75	3.13	0.22 x 0.75	4.50	6.94	7.50	PFK2
350	**PH350AR**	B	29.2/14.6	4.50	4.88	4.44	3.75	3.75	0.22 x 0.75	5.18	6.38	8.30	PFK3
500	**PH500AR**	B	41.7/20.8	4.75	5.56	4.31	4.06	3.44	0.31 x 0.94	5.13	7.06	11.6	PFK3

Secondary fuse clips, fuse clip mounting screws and primary and secondary voltage links/jumpers supplied with transformers.
Please refer to page 11 for dimensional drawings. Special voltages and VA sizes available upon request.

All dimensions in inches

GROUP C

Primary Voltage:	**240 x 480**	230 x 460	220 x 440
Secondary Voltage:	**120 x 240**	115 x 230	110 x 220

50/60 Hertz

VA Rating	Catalog Number	Mtg. Fig.	Output Amps	Overall Dimensions			Mounting Centers		Mounting Slot	Height with Finger Guard	Depth with Finger Guard	Approx. Ship Weight Lbs.	Optional Primary Fuse Kit P/N
				A	B	C	D	E	G X H				
50	**PH50MQMJ**	A	0.42/0.21	3.00	4.38	3.19	2.50	2.25	0.22 x 0.44	4.00	5.82	3.50	PFK1
75	**PH75MQMJ**	A	0.63/0.31	3.25	3.88	3.56	2.63	2.50	0.22 x 0.44	4.37	5.32	3.54	PFK1
100	**PH100MQMJ**	A	0.83/0.42	3.25	4.19	3.63	2.63	2.63	0.22 x 0.44	4.50	5.63	4.50	PFK1
150	**PH150MQMJ**	B	1.25/0.63	4.00	4.94	3.81	3.38	2.75	0.22 x 0.75	4.50	6.44	5.70	PFK2
250	**PH250MQMJ**	B	2.08/1.04	4.50	5.44	3.81	3.75	3.13	0.22 x 0.75	4.50	6.94	7.50	PFK2
350	**PH350MQMJ**	B	2.92/1.46	4.50	5.19	4.44	3.75	3.75	0.22 x 0.75	5.18	6.69	10.1	PFK3
500	**PH500MQMJ**	B	4.17/2.08	4.75	5.94	4.31	4.06	3.81	0.31 x 0.94	5.13	7.44	14.2	PFK3
750	**PH750MQMJ**	B	6.25/3.13	5.13	6.69	4.31	4.38	4.31	0.31 x 0.81	5.13	8.19	16.6	PFK3
1000	**PH1000MQMJ**	B	8.33/4.17	5.25	6.81	4.94	4.50	4.44	0.31 x 0.81	5.56	8.31	23.6	PFK3
1500	**PH1500MQMJ**	B	12.5/6.25	5.25	8.19	4.94	4.50	6.06	0.38 x 1.00	5.56	9.69	32.0	PFK3

Secondary fuse clips, fuse clip mounting screws and primary and secondary voltage links/jumpers supplied standard with transformers.
Please refer to page 11 for dimensional drawings. Special voltages and VA sizes available upon request.

All dimensions in inches

Hammond Power Solutions

GROUP D

Primary Voltage:	**240 x 480**	230 x 460	220 x 440
Secondary Voltage:	**12 x 24**	11.5 x 23	11 x 22

50/60 Hertz

VA Rating	Catalog Number	Mtg. Fig.	Output Amps	Overall Dimensions			Mounting Centers		Mounting Slot	Height with Finger Guard	Depth with Finger Guard	Approx. Ship Weight Lbs.	Optional Primary Fuse Kit P/N
				A	B	C	D	E	G X H				
50	**PH50QR**	A	4.17/2.08	3.00	4.38	3.19	2.50	2.25	0.22 x 0.44	4.00	5.82	3.50	PFK1
75	**PH75QR**	A	6.25/3.13	3.25	3.88	3.56	2.63	2.50	0.22 x 0.44	4.37	5.32	3.54	PFK1
100	**PH100QR**	A	8.33/4.17	3.25	4.19	3.63	2.63	2.63	0.22 x 0.44	4.44	5.63	4.50	PFK1
150	**PH150QR**	B	12.5/6.25	4.00	4.94	3.81	3.38	2.75	0.22 x 0.75	4.50	6.44	5.70	PFK2
250	**PH250QR**	B	20.8/10.4	4.50	5.44	3.81	3.75	3.13	0.22 x 0.75	4.50	6.94	7.50	PFK2
350	**PH350QR**	B	29.2/14.6	4.50	5.19	4.44	3.75	3.75	0.22 x 0.75	5.18	6.69	10.1	PFK3
500	**PH500QR**	B	41.7/20.8	4.75	5.94	4.31	4.06	3.81	0.31 x 0.94	5.13	7.44	14.2	PFK3

Secondary fuse clips, fuse clip mounting screws and primary and secondary voltage links/jumpers supplied standard with transformers.
Please refer to page 11 for dimensional drawings. Special voltages and VA sizes available upon request.

All dimensions in inches

GROUP E

Primary Voltage:	**208 x 416**	200 x 400	190 x 380
Secondary Voltage:	**120 x 240**	115 x 230	110 x 220

50/60 Hertz

VA Rating	Catalog Number	Mtg. Fig.	Output Amps	Overall Dimensions			Mounting Centers		Mounting Slot	Height with Finger Guard	Depth with Finger Guard	Approx. Ship Weight Lbs.	Optional Primary Fuse Kit P/N
				A	B	C	D	E	G X H				
50	**PH50SP**	A	0.42/0.21	3.00	4.38	3.19	2.50	2.25	0.22 x 0.44	4.00	5.82	3.50	PFK1
75	**PH75SP**	A	0.63/0.31	3.25	3.88	3.56	2.63	2.50	0.22 x 0.44	4.37	5.32	3.54	PFK1
100	**PH100SP**	A	0.83/0.42	3.25	4.19	3.63	2.63	2.63	0.22 x 0.44	4.50	5.63	4.50	PFK1
150	**PH150SP**	B	1.25/0.63	4.00	4.94	3.81	3.38	2.75	0.22 x 0.75	4.50	6.44	5.70	PFK2
250	**PH250SP**	B	2.08/1.04	4.50	5.44	3.81	3.75	3.13	0.22 x 0.75	4.50	6.94	7.50	PFK2
350	**PH350SP**	B	2.92/1.46	4.50	5.19	4.44	3.75	3.75	0.22 x 0.75	5.18	6.69	10.1	PFK3
500	**PH500SP**	B	4.17/2.08	4.75	5.94	4.31	4.06	3.81	0.31 x 0.94	5.13	7.44	14.2	PFK3
750	**PH750SP**	B	6.25/3.13	5.13	6.69	4.31	4.38	4.31	0.31 x 0.81	5.013	8.19	16.6	PFK3
1000	**PH1000SP**	B	8.33/4.17	5.25	6.81	4.94	4.50	4.44	0.31 x 0.81	5.56	8.31	23.6	PFK3

Secondary fuse clips, fuse clip mounting screws and primary and secondary voltage links/jumpers supplied standard with transformers.
Please refer to page 11 for dimensional drawings. Special voltages and VA sizes available upon request.

All dimensions in inches

GROUP F

Primary Voltage:	**120 x 240**	115 x 230	110 x 220
Secondary Voltage:	**120 x 240**	115 x 230	110 x 220

50/60 Hertz

VA Rating	Catalog Number	Mtg. Fig.	Output Amps	Overall Dimensions			Mounting Centers		Mtg. Slot	Height with Finger Guard	Depth with Finger Guard	Approx. Ship Weight Lbs.	Optional Primary Fuse Kit P/N
				A	B	C	D	E	G X H				
50	**PH50PP**	A	0.42/0.21	3.00	4.38	3.19	2.50	2.25	0.22 x 0.44	4.00	5.82	3.50	PFK1
75	**PH75PP**	A	0.63/0.31	3.25	3.88	3.56	2.63	2.50	0.22 x 0.44	4.37	5.32	3.54	PFK1
100	**PH100PP**	A	0.83/0.42	3.25	4.19	3.63	2.63	2.63	0.22 x 0.44	4.50	5.63	4.50	PFK1
150	**PH150PP**	B	1.25/0.63	4.00	4.94	3.81	3.38	2.75	0.22 x 0.75	4.50	6.44	5.70	PFK2
250	**PH250PP**	B	2.08/1.04	4.50	5.44	3.81	3.75	3.13	0.22 x 0.75	4.50	6.94	7.50	PFK2
350	**PH350PP**	B	2.92/1.46	4.50	5.19	4.44	3.75	3.75	0.22 x 0.75	5.18	6.69	10.1	PFK3
500	**PH500PP**	B	4.17/2.08	4.75	5.94	4.31	4.06	3.81	0.31 x 0.94	5.13	7.44	14.2	PFK3
750	**PH750PP**	B	6.25/3.13	5.13	6.69	4.31	4.38	4.31	0.31 x 0.81	5.13	8.19	16.6	PFK3
1000	**PH1000PP**	B	8.33/4.17	5.25	6.81	4.94	4.50	4.44	0.31 x 0.81	5.56	8.31	23.6	PFK3
1500	**PH1500PP**	B	12.5/6.25	5.25	8.19	4.94	4.50	6.06	0.38 x 1.0	5.56	9.69	32.0	PFK3

Secondary fuse clips, fuse clip mounting screws and primary and secondary voltage links/jumpers supplied standard with transformers.
Please refer to page 11 for dimensional drawings. Special voltages and VA sizes available upon request.

All dimensions in inches

HPS Imperator

Encapsulated Industrial Control Transformer

GROUP G

Primary Voltage:	**120 x 240**	115 x 230	110 x 220	
Secondary Voltage:	**12 x 24**	11.5 x 23	11 x 22	50/60 Hertz

VA Rating	Catalog Number	Mtg. Fig.	Output Amps	Overall Dimensions			Mounting Centers		Mounting Slot	Height with Finger Guard	Depth with Finger Guard	Approx. Ship Weight Lbs.	Optional Primary Fuse Kit P/N
				A	B	C	D	E	G X H				
50	**PH50PG**	A	4.17/2.08	3.00	4.38	3.19	2.50	2.25	0.22 x 0.44	4.00	5.82	3.50	PFK1
75	**PH75PG**	A	6.25/3.13	3.25	3.88	3.56	2.63	2.50	0.22 x 0.44	4.37	5.32	3.54	PFK1
100	**PH100PG**	A	8.33/4.17	3.25	4.19	3.63	2.63	2.63	0.22 x 0.44	4.44	5.63	4.50	PFK1
150	**PH150PG**	B	12.5/6.25	4.00	4.94	3.81	3.38	2.75	0.22 x 0.75	4.50	6.44	5.70	PFK2
250	**PH250PG**	B	20.8/10.4	4.50	5.44	3.81	3.75	3.13	0.22 x 0.75	4.50	6.94	7.50	PFK2
350	**PH350PG**	B	29.2/14.6	4.50	5.19	4.44	3.75	3.75	0.22 x 0.75	5.18	6.69	10.1	PFK3
500	**PH500PG**	B	41.7/20.8	4.75	5.94	4.31	4.06	3.81	0.31 x 0.94	5.13	7.44	14.2	PFK3
750	**PH750PG**	C	62.5/31.3	5.25	6.25	4.94	4.38	4.31	0.31 x 0.81	5.56	7.88	16.6	PFK3
1000	**PH1000PG**	C	83.3/41.7	5.25	6.81	4.94	4.50	4.44	0.31 x 0.81	5.56	8.31	23.6	PFK3

Secondary fuse clips and fuse clip mounting screws supplied standard with transformers up to and including 500VA. Primary and secondary voltage links/jumpers supplied standard with transformers. Please refer to page 11 for dimensional drawings. Special voltages and VA sizes available upon request.

All dimensions in inches

GROUP H

Primary Voltage:	600/480/240	**575/460/230**	550/440/220	
Secondary Voltage:	120/100	**115/95**	110/90	50/60 Hertz

VA Rating	Catalog Number	Mtg. Fig.	Output Amps	Overall Dimensions			Mounting Centers		Mounting Slot	Height with Finger Guard	Depth with Finger Guard	Approx. Ship Weight Lbs.	Optional Primary Fuse Kit P/N
				A	B	C	D	E	G X H				
50	**PH50MBMH**	A	0.43	3.25	4.06	3.63	2.63	2.63	0.22 x 0.44	4.50	5.50	4.10	PFK5
75	**PH75MBMH**	A	0.65	3.25	4.19	3.63	2.63	2.63	0.22 x 0.44	4.50	5.63	4.50	PFK5
100	**PH100MBMH**	B	0.87	4.00	4.63	3.81	3.38	2.75	0.22 x 0.75	4.50	6.25	4.90	PFK6
150	**PH150MBMH**	B	1.30	4.00	5.44	3.81	3.38	2.75	0.22 x 0.75	4.50	6.94	7.60	PFK6
250	**PH250MBMH**	B	2.17	4.50	5.19	4.44	3.75	3.75	0.22 x 0.75	5.18	6.69	10.1	PFK6
350	**PH350MBMH**	B	3.04	4.50	5.56	4.44	3.75	3.75	0.22 x 0.75	5.18	7.06	11.0	PFK7
500	**PH500MBMH**	B	4.35	4.75	6.69	4.31	4.06	4.50	0.31 x 0.94	5.13	8.19	16.3	PFK7
750	**PH750MBMH**	B	6.52	5.25	6.81	4.94	4.50	4.44	0.31 x 0.81	5.56	8.31	23.6	PFK7
1000	**PH1000MBMH**	B	8.70	5.30	7.80	4.90	4.50	6.11	0.38 x 1.0	5.60	9.70	31.2	PFK7
1500	**PH1500MBMH**	B	13.0	5.30	8.19	4.94	4.50	6.06	0.38 x 1.0	5.56	9.69	32.0	PFK7

Secondary fuse clips, fuse clip mounting screws and primary and secondary voltage links/jumpers supplied standard with transformers. Please refer to page 11 for dimensional drawings. Special voltages and VA sizes available upon request.

All dimensions in inches

GROUP I

Primary Voltage:	480/240	**460/230/208**	440/220/200	
Secondary Voltage:	120/25	**115/24**	110/23	50/60 Hertz

VA Rating	Catalog Number	Mtg. Fig.	Output Amps	Overall Dimensions			Mounting Centers		Mounting Slot	Height with Finger Guard	Depth with Finger Guard	Approx. Ship Weight Lbs.	Optional Primary Fuse Kit P/N
				A	B	C	D	E	G X H				
50	**PH50MLI**	A	0.43/2.08	3.25	4.06	3.56	2.63	2.50	0.22 x 0.44	4.37	5.50	4.00	PFK5
75	**PH75MLI**	A	0.65/3.13	3.25	4.25	3.56	2.63	2.50	0.22 x 0.44	4.37	5.69	4.60	PFK5
100	**PH100MLI**	A	0.87/4.17	3.25	4.69	3.63	2.63	2.63	0.22 x 0.44	4.50	6.25	5.20	PFK5
150	**PH150MLI**	B	1.30/6.25	4.00	5.44	3.81	3.38	2.75	0.22 x 0.75	4.50	6.94	7.60	PFK6
250	**PH250MLI**	B	2.17/10.42	4.50	5.19	4.44	3.75	3.75	0.22 x 0.75	5.18	6.69	10.1	PFK6
350	**PH350MLI**	B	3.04/14.58	4.50	5.56	4.44	3.75	3.75	0.22 x 0.75	5.18	7.06	11.0	PFK7
500	**PH500MLI**	B	4.35/20.83	4.75	6.69	4.31	4.06	4.50	0.31 x 0.94	5.13	8.19	16.3	PFK7
750	**PH750MLI**	C	6.52/31.25	5.25	6.50	4.94	4.50	4.13	0.31 x 0.81	5.56	8.31	21.0	PFK7
1000	**PH1000MLI**	C	8.70/41.67	5.25	8.19	4.94	4.50	5.81	0.31 x 0.81	5.56	9.69	31.2	PFK7

Secondary fuse clips and fuse clip mounting screws supplied standard with transformers up to and including 500VA. Primary and secondary voltage links/jumpers supplied standard with transformers. Please refer to page 11 for dimensional drawings. Special voltages and VA sizes available upon request.

All dimensions in inches

GROUP J

Primary Voltage: **415/400/380**
Secondary Voltage: **110 x 220**

50/60 Hertz

VA Rating	Catalog Number	Mtg. Fig.	Output Amps	Overall Dimensions			Mounting Centers		Mounting Slot	Height with Finger Guard	Depth with Finger Guard	Approx. Ship Weight Lbs.	Optional Primary Fuse Kit P/N
				A	B	C	D	E	G X H				
50	**PH50MEMX**	A	0.45/0.23	3.00	4.38	3.19	2.50	2.25	0.22 x 0.44	4.00	5.82	3.50	PFK4
75	**PH75MEMX**	A	0.68/0.34	3.25	4.06	3.63	2.63	2.63	0.22 x 0.44	4.44	5.50	4.10	PFK5
100	**PH100MEMX**	A	0.91/0.45	3.25	4.19	3.63	2.63	2.63	0.22 x 0.44	4.44	5.63	4.50	PFK5
150	**PH150MEMX**	B	1.36/0.68	4.00	4.94	3.81	3.38	2.75	0.22 x 0.75	4.50	6.44	5.70	PFK6
250	**PH250MEMX**	B	2.27/1.14	4.50	5.44	3.81	3.75	3.13	0.22 x 0.75	4.50	6.94	7.50	PFK6
350	**PH350MEMX**	B	3.18/1.59	4.50	5.19	4.44	3.75	3.75	0.22 x 0.75	5.18	6.69	10.1	PFK7
500	**PH500MEMX**	B	4.55/2.27	4.75	5.94	4.31	4.06	3.81	0.31 x 0.94	5.13	7.44	14.2	PFK7
750	**PH750MEMX**	B	6.82/3.41	5.25	6.50	4.94	4.50	4.13	0.31 x 0.81	5.56	8.00	21.0	PFK7
1000	**PH1000MEMX**	B	9.09/4.55	5.25	6.81	4.94	4.50	4.44	0.31 x 0.81	5.56	8.31	23.6	PFK7

Secondary fuse clips, fuse clip mounting screws and primary and secondary voltage links/jumpers supplied with transformers.
Please refer to page 11 for dimensional drawings. Special voltages and VA sizes available upon request.

All dimensions in inches

GROUP K

Primary Voltage: **380/277/208**
Secondary Voltage: **120 x 240**

50/60 Hertz

VA Rating	Catalog Number	Mtg. Fig.	Output Amps	Overall Dimensions			Mounting Centers		Mounting Slot	Height with Finger Guard	Depth with Finger Guard	Approx. Ship Weight Lbs.	Optional Primary Fuse Kit P/N
				A	B	C	D	E	G X H				
50	**PH50MGJ**	A	0.42/0.21	3.25	3.88	3.56	2.63	2.50	0.22 x 0.44	4.37	5.32	3.54	PFK5
75	**PH75MGJ**	A	0.63/0.31	3.25	4.19	3.63	2.63	2.63	0.22 x 0.44	4.44	5.63	4.50	PFK5
100	**PH100MGJ**	A	0.83/0.42	3.25	4.69	3.63	2.63	2.63	0.22 x 0.44	4.50	6.13	5.20	PFK5
150	**PH150MGJ**	B	1.25/0.63	4.00	5.44	3.81	3.38	2.75	0.22 x 0.75	4.50	6.94	7.60	PFK6
250	**PH250MGJ**	B	2.08/1.04	4.50	4.88	4.44	3.75	3.75	0.22 x 0.75	5.18	6.38	8.30	PFK6
350	**PH350MGJ**	B	2.92/1.46	4.50	5.56	4.44	3.75	3.75	0.22 x 0.75	5.18	7.06	11.0	PFK7
500	**PH500MGJ**	B	4.17/2.08	4.75	6.69	4.31	4.06	4.50	0.31 x 0.94	5.13	8.19	16.3	PFK7
750	**PH750MGJ**	B	6.25/3.13	5.25	6.81	4.94	4.50	4.44	0.31 x 0.81	5.56	8.31	23.6	PFK7
1000	**PH1000MGJ**	B	8.33/4.17	5.25	7.25	4.94	4.50	4.83	0.31 x 0.81	5.44	8.75	25.5	PFK7

Secondary fuse clips, fuse clip mounting screws and primary and secondary voltage links/jumpers supplied with transformers.
Please refer to page 11 for dimensional drawings. Special voltages and VA sizes available upon request.

All dimensions in inches

ACCESSORY KITS AVAILABLE

Standard Secondary Fuse Kits

All HPS Imperator control transformers are supplied with standard secondary fuse kits which include: 13/32" x 1 1/2" midget/type CC fuse clips, fuse clip mounting screws, primary and secondary voltage links and the PHAK1 instruction sheet (note: secondary fuse clips and fuse clip mounting screws not supplied on the PH750PG, PH1000PG, PH750MLI and PH1000MLI). Please consult the HPS Transformer Products catalog for additional details.

Optional Primary Fuse Kits

Kit Part Number	Transformer Part Number Suffix's	VA Sizes	Parts Included in Kit
PFK1	Refer to Specification Tables on pages 4 to 7	Refer to Specification Tables on pages 4 to 7	4 fuse clips, 4 mtg. screws, PHAK1 instruction sheet
PFK2			4 fuse clips, 4 mtg. screws, PHAK1 instruction sheet
PFK3			4 fuse clips, 4 mtg. screws, PHAK1 instruction sheet
PFK4			4 fuse clips, 4 mtg. screws, 1 jumper, 1 finger guard, PHAK1 instruction sheet
PFK5			4 fuse clips, 4 mtg. screws, 1 jumper, 1 finger guard, PHAK1 instruction sheet
PFK6			4 fuse clips, 4 mtg. screws, 1 jumper wire, PHAK1 instruction sheet
PFK7			4 fuse clips, 4 mtg. screws, 1 jumper wire, PHAK1 instruction sheet

Note: Maximum allowable current rating on all primary and secondary fuse kits is 30 amps.

HPS Imperator

Encapsulated Industrial Control Transformer

FACTORY INSTALLED PRIMARY AND SECONDARY FUSE KITS

HPS now stocks some HPS Imperator series voltage groups with FACTORY INSTALLED primary and secondary fuse clips. To order, just add the suffix "**-FK**" to the end of the standard part number.

Factory installed primary and secondary fuse clips are only available on the following voltage groups:
Group C (p/n: PH*MQMJ-FK) | Group G (p/n: PH***PG-FK) | Group I (p/n: PH***MLI-FK)**

On PH750PG-FK, PH1000PG-FK, PH750MLI-FK, and PH1000MLI-FK, only primary fuse clips are included on factory installed units. Secondary fuse clips are not included or available on these units.

Note: All factory installed fuse kits are pre-wired at the transformers highest primary voltage and the lowest secondary voltage. To hook up at a different primary or secondary voltage, please refer to the wiring instruction sheet included with the transformer.

Optional Unfused Finger Guard Kits

Kit Part Number	Transformer Part Number Suffix's	VA Sizes	Parts Included in Kit
FG1	AJ, AR, MQMJ, MEMX, QR, SP, PG, PP	50	1 finger guard (unfused), PHAK1 instruction sheet
FG2	MBMH, MGJ, MLI	50	1 finger guard (unfused), PHAK1 instruction sheet
FG2	All	75	1 finger guard (unfused), PHAK1 instruction sheet
FG2	All (excluding PH100MBMH)	100	1 finger guard (unfused), PHAK1 instruction sheet
	Refer to FG3, FG4 or FG5 below	150 to 1500	

Optional Fused Finger Guard Kits

Kit Part Number	Transformer Part Number Suffix's	VA Sizes	Parts Included in Kit
FGF1	AJ, AR, MQMJ, MEMX, QR, SP, PG, PP	50	1 finger guard (fused), PHAK1 instruction sheet
FGF2	MBMH, MGJ, MLI	50	1 finger guard (fused), PHAK1 instruction sheet
FGF2	All	75	1 finger guard (fused), PHAK1 instruction sheet
FGF2	All (excluding PH100MBMH)	100	1 finger guard (fused), PHAK1 instruction sheet
FG3	MBMH	100	1 finger guard, PHAK1 instruction sheet
FG3	All	150	1 finger guard, PHAK1 instruction sheet
FG3	AJ, AR, MQMJ, MEMX, QR, SP, PG, PP	250	1 finger guard, PHAK1 instruction sheet
FG4	MBMH, MGJ, MLI	250	1 finger guard, PHAK1 instruction sheet
FG4	All	350, 500	1 finger guard, PHAK1 instruction sheet
FG4	AJ, AR, MQMJ, QR, SP, PP	750	1 finger guard, PHAK1 instruction sheet
FG5	MBMH, MEMX, MGJ, MLI, PG	750	1 finger guard, PHAK1 instruction sheet
FG5	All	1000, 1500	1 finger guard, PHAK1 instruction sheet

Note: Each finger guard kit supplies either the primary or secondary side.

Hammond Power Solutions

SAMPLE ACCESSORY DRAWINGS

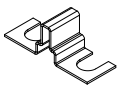

Voltage Link

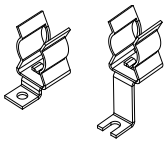

Fuse Clips
(For 50, 75 and 100VA)

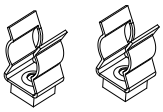

Fuse Clips
(For 150VA to 1500VA)

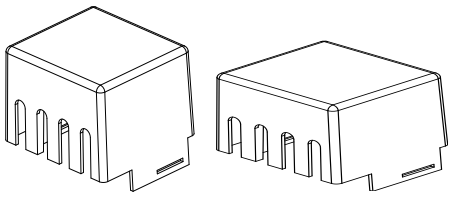

Fused & Unfused Finger Guard
(For 50, 75 and 100VA)

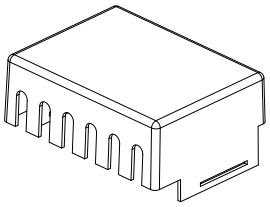

Finger Guard
(For 150VA to 1500VA)

Sample Accessory Assembly Drawings

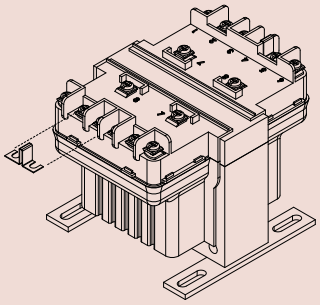

Sample Assembly Drawing for Voltage Link Installation

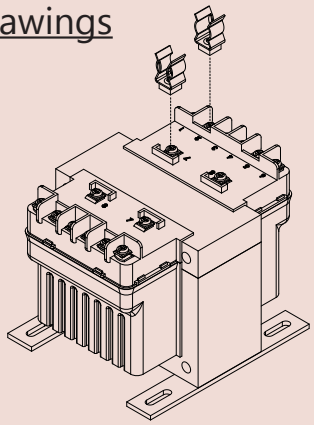

Sample Assembly Drawing for Secondary Fuse Clip Installation
(For 150VA to 1500VA)

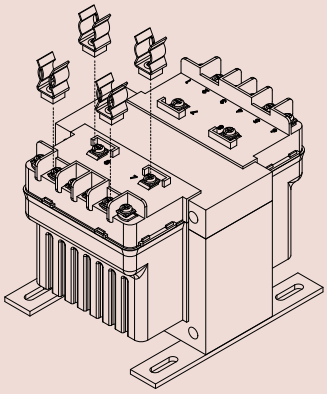

Sample Assembly Drawing for Primary Fuse Clip Installation
(For 150VA to 1500VA)

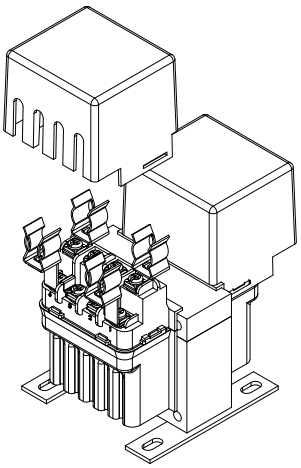

Sample Assembly Drawing for Finger Guard Installation
(For 50, 75 and 100VA)

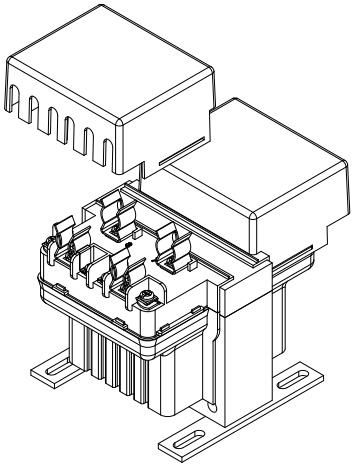

Sample Assembly Drawing for Finger Guard Installation
(For 150VA to 1500VA)

HPS Imperator

Encapsulated Industrial Control Transformer

OVERCURRENT PROTECTION

Secondary

The overcurrent protection listed below, in amperes, is 125% of the rated current of the transformer. Choose the next higher fuse rating if these numbers do not correspond with standard fuse selections.

Sec. Voltage	VA Rating															
	25	50	75	100	150	200	250	300	350	500	750	1000	1500	2000	3000	5000
12	2.7	5.3	7.9	11	16	21	27	-	-	-	-	-	-	-	-	-
24	1.4	2.7	4.0	5.3	7.9	11	14	16	19	27	-	-	-	-	-	-
90	0.4	0.7	1.1	1.4	2.1	2.8	3.5	4.2	4.9	7.0	11	14	21	28	-	-
95	0.4	0.7	1.0	1.4	2.0	2.7	3.3	4.0	4.7	6.6	9.9	14	20	27	-	-
100	0.4	0.7	1.0	1.3	1.9	2.5	3.2	3.8	4.4	6.3	9.4	13	19	25	-	-
110	0.3	0.6	0.9	1.2	1.8	2.3	2.9	3.5	4.0	5.7	8.6	12	18	23	-	-
115	0.3	0.6	0.9	1.1	1.7	2.2	2.8	3.3	3.9	5.5	8.2	11	17	22	-	-
120	0.3	0.6	0.8	1.1	1.6	2.1	2.7	3.2	3.7	5.3	7.9	11	16	21	-	-
220	0.15	0.3	0.5	0.6	0.9	1.2	1.5	1.8	2.0	2.9	4.3	5.7	8.6	12	18	29
230	0.14	0.3	0.5	0.6	0.9	1.1	1.4	1.7	2.0	2.8	4.1	5.5	8.2	11	17	28
240	0.14	0.3	0.4	0.6	0.8	1.1	1.4	1.6	1.9	2.7	4.0	5.3	7.9	11	16	27

Primary

To assist in the selection of fuses, the following chart suggests the maximum primary fuse rating in amperes. The number shown is the maximum overcurrent protection when the primary current is less than 2 amps and the overcurrent protection device is rated for 300%. Choose the next higher fuse rating if these numbers do not correspond with standard fuse selections.

Pri.	VA Rating																
Volt	25	50	75	100	150	200	250	300	350	500	750	1000	1500	2000	3000	5000	7500
115	0.6	1.25	1.8	2.5	3.5	5	4	5	5	8	10	15	20	25	-	-	-
120	0.6	1.25	1.8	2.25	3.5	5	4	5	5	8	10	15	15	20	-	-	-
200	0.3	0.75	1.125	1.5	2.25	3	3.5	4.5	5	4.5	7	9	15	15	20	-	-
208	0.3	0.6	1	1.4	2	2.8	3.5	4	5	4	6	8	12	15	20	30	-
220	0.3	0.6	1	1.25	2	2.5	3.2	4	4.5	4	6	8	12	15	20	30	-
230	0.3	0.6	0.8	1.25	1.8	2.5	3.2	3.5	4.5	4	6	8	10	15	20	30	-
240	0.3	0.6	0.8	1.25	1.8	2.25	3	3.5	4	3.5	5	7	10	15	15	30	-
277	0.25	0.5	0.8	1	1.6	2	2.5	3.2	3.5	5	5	6	9	12	15	25	-
347	0.25	0.5	0.8	1	1.6	2	2.5	3.2	3.5	5	6.25	5	7.5	10	15	20	30
380	0.1875	0.3	0.5	0.75	1.125	1.5	1.8	2.25	2.5	3.5	5.6	4.5	6.25	9	15	20	25
400	0.1875	0.3	0.5	0.75	1.125	1.5	1.8	2.25	2.5	3.5	5.6	4.5	6.25	9	12	15	20
416	0.15	0.3	0.5	0.6	1	1.4	1.8	2	2.5	3.5	5	4	6	8	12	15	20
440	0.15	0.3	0.5	0.6	1	1.25	1.6	2	2.25	3.2	5	4	6	8	12	15	20
460	0.15	0.3	0.4	0.6	0.8	1.25	1.6	1.8	2.25	3.2	4.5	3.5	6	8	12	15	20
480	0.15	0.3	0.4	0.6	0.8	1.25	1.5	1.8	2	3	4.5	3.5	5	7	10	15	20
550	0.125	0.25	0.4	0.5	0.8	1	1.25	1.6	1.8	2.5	4	5	4.5	6	9	15	15
575	0.125	0.25	0.3	0.5	0.75	1	1.25	1.5	1.8	2.5	3.5	5	4.5	6	9	15	15
600	0.125	0.2	0.3	0.5	0.75	0.8	1.25	1.5	1.6	2.25	3.5	5	4	6	9	15	15

DIMENSIONAL DRAWINGS

Some actual transformer units may differ from dimensional drawings shown below.

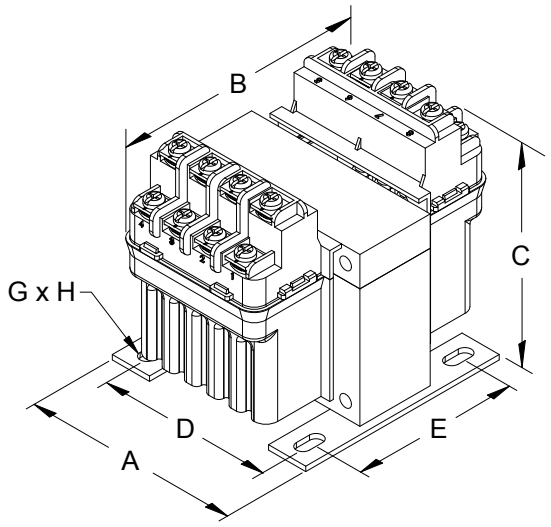

FIGURE A (100 VA and less)

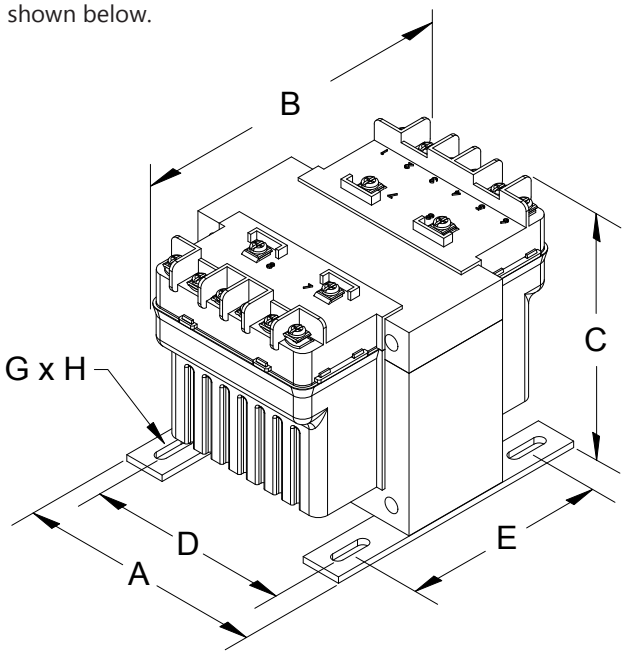

FIGURE B (150 VA to 1500 VA)

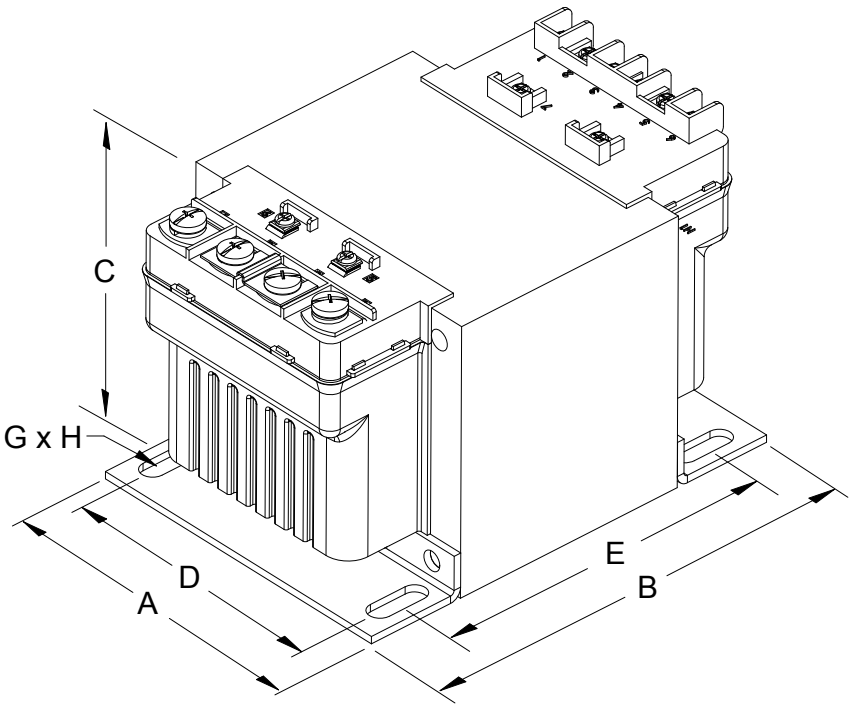

FIGURE C (For PH750PG, PH1000PG, PH750MLI & PH1000MLI)

Hammond Power Solutions

CANADA

UNITED STATES

ASIA

CANADA
Hammond Power Solutions
595 Southgate Drive
Guelph, Ontario N1G 3W6
Tel: (519) 822-2441
Fax: (519) 822-9701
Toll Free: 1-888-798-8882
sales@hammondpowersolutions.com

UNITED STATES
Hammond Power Solutions
1100 Lake Street
Baraboo, Wisconsin 53913-2866
Tel: (608) 356-3921
Fax: (608) 355-7623
Toll Free: 1-866-705-4684
sales@hammondpowersolutions.com

ASIA
Hammond Power Solutions Pvt. Ltd.
D. No. 5-2/222/IP/B, II-Floor, Icon Plaza
Allwyn X-Roads, Miyapur, Hyderabad 500 049
Tel: +91-994-995-0009
marketing-india@hammondpowersolutions.com

EMEA (Sales Office)
Hammond Power Solutions SpA
Tel: +49 (152) 08800468
sales-emea@hammondpowersolutions.com

Scan this QR code with your smartphone to view additional information on the HPS Imperator®.

Distributed by:

www.hammondpowersolutions.com

Literature No.: ENCCON
Issue Date: September 2019