Transparent Object Detection Photoelectric Sensor
E3S-DB

Superb Detection of Many Types of Transparent Objects

- Double slits inside Sensor prevent incorrect operation.
- P-opaquing function* improves detection of PET bottles and transparent films.
- Smart Teaching for optimum settings in as little as 3 seconds.
- Maximum sensing distance of 3.5 m.
- IP69K protection recommended for food and beverage industry. Third-party certification from Ecolab in Europe for detergent resistance.
- Variable connector and cable directions, and 360° indicators for greater usability.

✻ This function uses polarization to opaque transparent objects that exhibit double refraction.

Refer to the *Safety Precautions* on page 7.

For the most recent information on models that have been certified for safety standards, refer to your OMRON website.

Ordering Information

Sensors (Refer to *Dimensions* on page 8.)

Red light

Sensing method	Appearance	Sensitivity adjustment	Connection method	Sensing distance ✻2	Model	
					NPN output	PNP output
Retro-reflective (with MSR function)	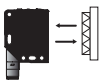 ✻1	Smart Teaching	Pre-wired (2 m)	3.5 m (with E39-R8)	E3S-DBN11 2M	E3S-DBP11 2M
			Connector (M12)		E3S-DBN21	E3S-DBP21
			M12 Smartclick pre-wired connector (0.3 m)		E3S-DBN31 0.3M	E3S-DBP31 0.3M
			Pre-wired (2 m)	Narrow beam 0.5 m (with E39-R21)	E3S-DBN12 2M	E3S-DBP12 2M
			Connector (M12)		E3S-DBN22	E3S-DBP22
			M12 Smartclick pre-wired connector (0.3 m)		E3S-DBN32 0.3M	E3S-DBP32 0.3M
		Eleven-turn adjuster	Pre-wired (2 m)	3.5 m (with E39-R8)	E3S-DBN11T 2M	E3S-DBP11T 2M
			Connector (M12)		E3S-DBN21T	E3S-DBP21T
			M12 Smartclick pre-wired connector (0.3 m)		E3S-DBN31T 0.3M	E3S-DBP31T 0.3M
			Pre-wired (2 m)	Narrow beam 0.5 m (with E39-R21)	E3S-DBN12T 2M	E3S-DBP12T 2M
			Connector (M12)		E3S-DBN22T	E3S-DBP22T
			M12 Smartclick pre-wired connector (0.3 m)		E3S-DBN32T 0.3M	E3S-DBP32T 0.3M

✻1. A Reflector is not included with the Sensor. Select a Reflector (sold separately) according to the application.
✻2. There is no close-range dead zone between the Sensor and Reflector.

Accessories (Sold Separately)

Sensor I/O Connectors (Connector on One End) (A Connector is required for a Sensor with a connector or pre-wired connector.)
Connectors are not provided with the Sensors. Be sure to order a Connector separately.

Size	Cable specifications	Appearance	Cable length	Model
*1 M12 (4 pins)	Fire-retardant robot cable	Straight *2	2 m	**Y92E-S12PP4S 2M**
			5 m	**Y92E-S12PP4S 5M**
		Straight Smartclick *2	2 m	**XS5F-D421-D80-F**
			5 m	**XS5F-D421-G80-F**

*1 Refer to your OMRON website for details on the Y92E-S12PP and XS5.
*2 The connectors will not rotate after they are connected.

Reflectors (A Reflector is required for each Retro-reflective Sensor.) **(Refer to *Dimensions* on page 10.)**
Reflectors are not provided with the Sensors. Be sure to order a Reflector separately.

Appearance	Sensing distance* (reference value)	Model	Quantity	Applicable Sensors	Remarks
	3.5 m	**E39-R1S**	1	**E3S-DB□□1(T)**	Standard model
	2 m	**E39-R1K**		**E3S-DB□□1(T)**	Non-fogging reflective plate
	3 m	**E39-RP1**		**E3S-DB□□1(T)**	Special Polarizing Reflector
	0.5 m (rated value)	**E39-R21**		**E3S-DB□□2(T)**	Narrow-beam Reflector
	3.5 m (rated value)	**E39-R8**		**E3S-DB□□1(T)**	Standard model
	1.5 m	**E39-RS10**		**E3S-DB□□1(T)**	Sheets
	0.5 m			**E3S-DB□□2(T)**	
	2.5 m	**E39-RS11**		**E3S-DB□□1(T)**	
	0.5 m			**E3S-DB□□2(T)**	

Note: 1. If you use the Reflector at any distance other than the rated distance, make sure that the stability indicator lights properly when you install the Sensor.
2. Refer to *Engineering Data (Reference Value)* on page 4 for details.
* There is no close-range dead zone between the Sensor and Reflector.

Mounting Brackets **(Refer to *Dimensions* on page 11.)**
A Mounting Bracket is not provided with the Sensor. It must be ordered separately as required.

Type	Appearance	Model	Quantity
Bottom-mounting		**E39-L192**	1
Side-mounting		**E39-L193**	

Note: For details, refer to the *Mounting Brackets* on E39-L/E39-S/E39-R which can be accessed from your OMRON website.

Ratings and Specifications

Item	Sensing method	Retro-reflective (with MSR function)			
Model	NPN output	E3S-DBN□1	E3S-DBN□1T	E3S-DBN□2	E3S-DBN□2T
	PNP output	E3S-DBP□1	E3S-DBP□1T	E3S-DBP□2	E3S-DBP□2T
Sensing distance		0 to 3.5 m (with E39-R8)		0 to 0.5 m (with E39-R21)	
Spot diameter (reference value)*1		6-mm dia. (at sensing distance of 250 mm)		2.5-mm dia. (at sensing distance of 200 mm)	
Light source (wavelength)		Red LED (624 nm)			
Power supply voltage		10 to 30 VDC, including 10% ripple (p-p)			
Power consumption		720 mW max. (current consumption: 30 mA max. at power supply voltage of 24 VDC)			
Control output		Load power supply voltage: 30 VDC max., Load current: 100 mA max. (Residual voltage: 2 V max.) Open-collector output (NPN/PNP output depending on model.)			
Indicators		Light indicator (orange) and stability indicator (green)			
Protection circuits		Reversed power supply polarity protection, output short-circuit protection, reversed output polarity protection, and mutual interference prevention			
Response time		Operate or reset: 0.5 ms max.			
Sensitivity adjustment		Smart Teaching	Eleven-turn adjuster	Smart Teaching	Eleven-turn adjuster
Smart Teaching lock function		Provided.	---	Provided.	---
Automatic compensation (AC³)		Provided (OFF by default).	---	Provided (OFF by default).	---
Ambient illumination		(Receiver side) Incandescent lamp: 3,000 lx max., Sunlight: 10,000 lx max.			
Ambient temperature range		Operating: –25 to 60°C, Storage: –40 to 70°C (with no icing or condensation)			
Ambient humidity range		Operating: 35% to 85%, Storage: 35% to 95% (with no condensation)			
Insulation resistance		20 MΩ min. (at 500 VDC)			
Dielectric strength		1,000 VAC at 50/60 Hz for 1 minute			
Vibration resistance		Destruction: 10 to 55 Hz with double amplitude of 1.5 mm for 2 hours each in X, Y, and Z directions			
Shock resistance		Destruction: 500 m/s² 3 times each in X, Y, and Z directions			
Degree of protection*2		IEC IP67, DIN 40050-9 IP69K			
Connection method		Pre-wired cable (standard cable length: 2 m) Connector (M12, 4 pins) Pre-wired connector (standard cable length: 0.3 m/M12, 4 pins)			
Weight (packed state/Sensor only)	**Pre-wired models**	Approx. 80 g/approx. 60 g			
	Models with connector	Approx. 60 g/approx. 40 g			
	Models with pre-wired connector	Approx. 180 g/approx. 160 g			
Materials	**Case**	Polybutylene terephthalate (PBT)/ABS			
	Lens	Methacrylic resin (PMMA)			
	Indicators	Methacrylic resin (PMMA)			
	Sensitivity adjuster and operation selector	Polyester elastomer			
	Cable	Polyvinyl chloride (PVC)			
Accessories		Instruction manual			

*1. Refer to *Emission Spot Diameter vs. Distance* in *Engineering Data (Reference Value)* on page 4 for details.

*2. IP69K Degree of Protection Specification

IP69K is a protection standard against high temperature and high-pressure water defined in the German standard DIN 40050, Part 9. The test piece is sprayed with water at 80°C at a water pressure of 80 to 100 BAR using a specified nozzle shape at a rate of 14 to 16 liters/min.

The distance between the test piece and nozzle is 10 to 15 cm, and water is sprayed horizontally for 30 seconds each at 0°, 30°, 60°, and 90° while rotating the test piece on a horizontal plane.

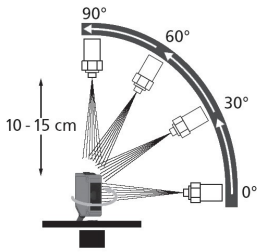

Engineering Data (Reference Value)

Parallel Operating Range

E3S-DB□□1(T) + E39-R1S (Reflector)

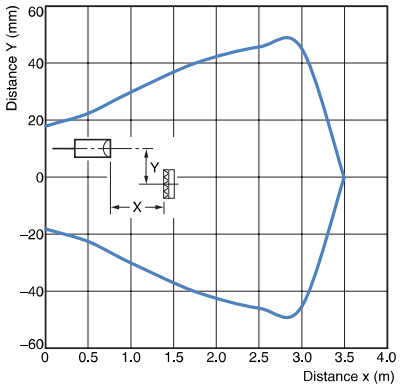

E3S-DB□□1(T) + E39-R8 (Reflector)

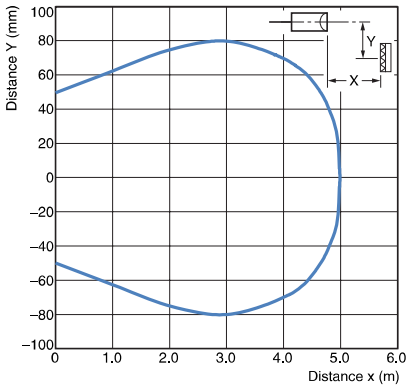

E3S-DB□□2(T) + E39-R21 (Reflector)

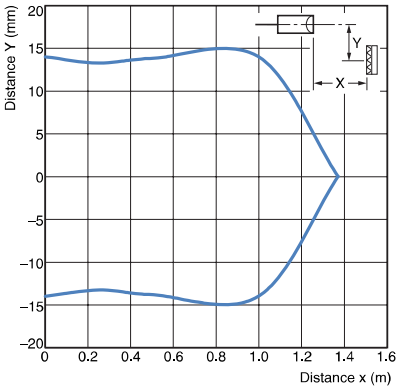

Excess Gain vs. Distance

E3S-DB□□1(T) + Reflector

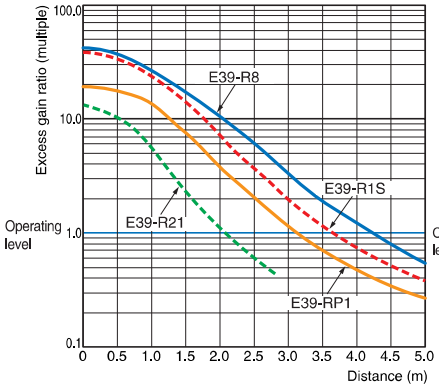

E3S-DB□□2(T) + E39-R21 (Reflector)

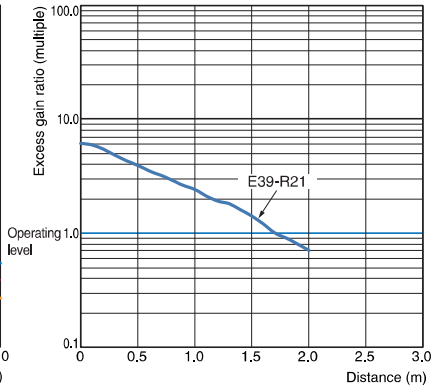

Emission Spot Diameter vs. Distance

E3S-DB□□1(T)

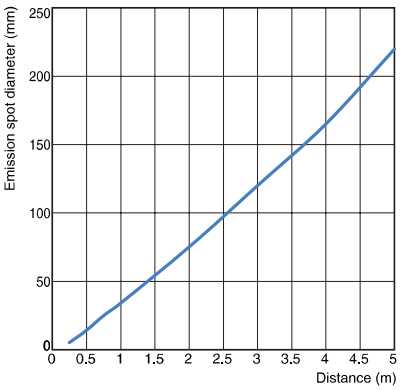

E3S-DB□□2(T)

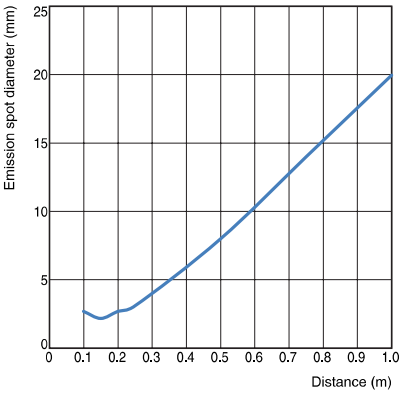

Note: These values were measured at maximum sensitivity.

Attenuation Level vs. Sensing Object Characteristics (Typical Values)

E3S-DB□□1(T) + E39-R1S/E39-R1K (Reflector)

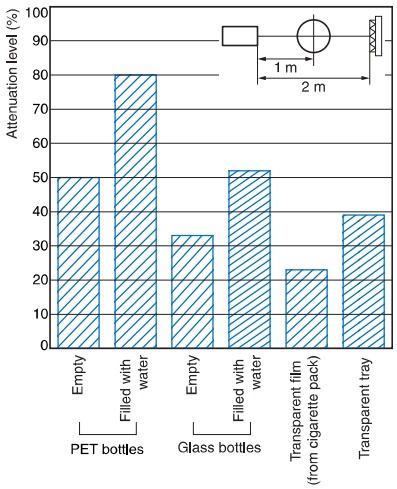

E3S-DB□□1(T) + E39-R8 (Reflector)

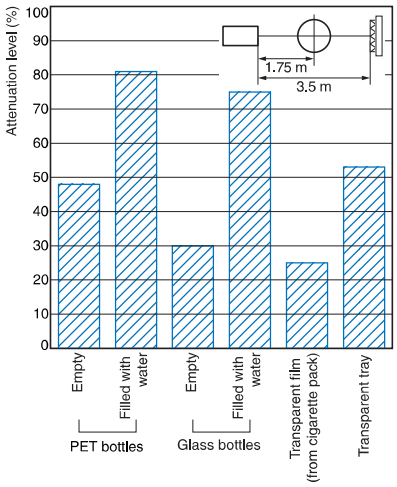

E3S-DB□□1(T) + E39-RP1 (Special Polarizing Reflector)

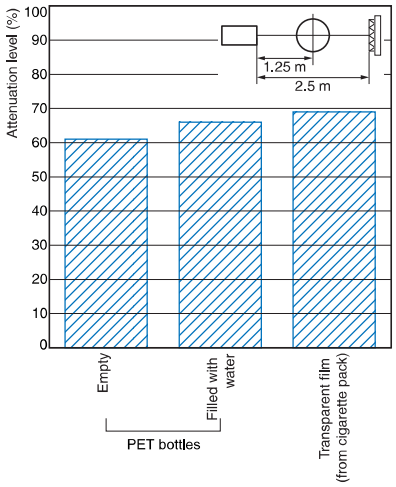

E3S-DB□□2(T) + E39-R21 (Reflector)

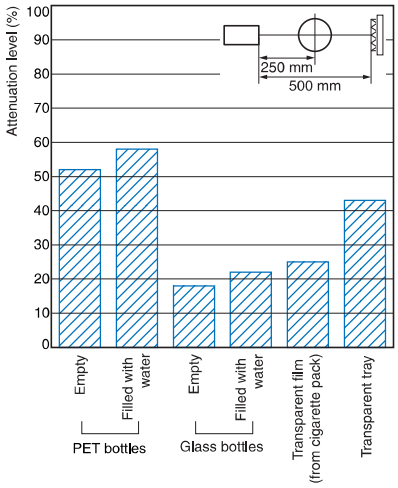

I/O Circuit Diagrams

NPN Output

Model	Operation mode	Timing charts	Output circuit
E3S-DBN□ E3S-DBN□T	Light ON	Incident light / No incident light; Light indicator (orange) ON / OFF; Output 1 ON / OFF; Load (e.g., relay) Operate / Reset Between brown (1) and black (4) leads)	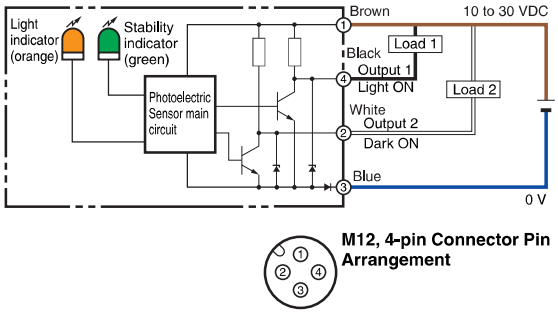 **M12, 4-pin Connector Pin Arrangement**
	Dark ON	Incident light / No incident light; Light indicator (orange) ON / OFF; Output 2 ON / OFF; Load (e.g., relay) Operate / Reset Between brown (1) and white (2) leads)	

PNP Output

Model	Operation mode	Timing charts	Output circuit
E3S-DBP□ E3S-DBP□T	Light ON	Incident light / No incident light; Light indicator (orange) ON / OFF; Output 1 ON / OFF; Load (e.g., relay) Operate / Reset Between blue (3) and black (4) leads)	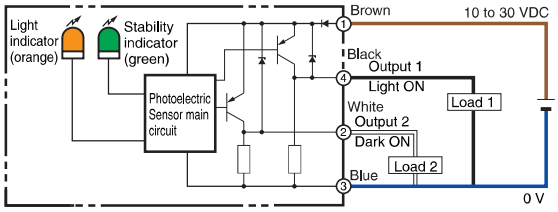 **M12, 4-pin Connector Pin Arrangement**
	Dark ON	Incident light / No incident light; Light indicator (orange) ON / OFF; Output 2 ON / OFF; Load (e.g., relay) Operate / Reset Between white (2) and blue (3) leads)	

Connectors (Sensor I/O Connectors)

M12, 4-pin Connectors

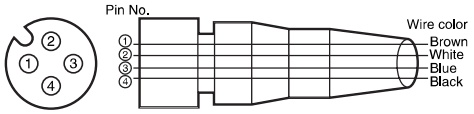

Classification	Wire color	Pin No.	Application
DC	Brown	①	Power supply (+V)
	White	②	Output 2 (Dark ON)
	Blue	③	Power supply (0 V)
	Black	④	Output 1 (Light ON)

Nomenclature

Smart Teaching Type

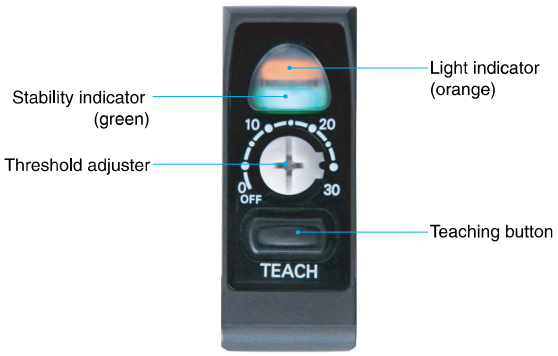

Eleven-turn Adjuster Type

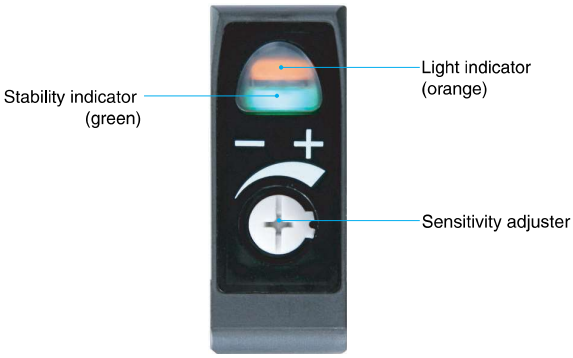

Safety Precautions

Be sure to read the precautions for all models in the website at: http://www.ia.omron.com/.

⚠ WARNING

Do not use the product with voltage in excess of the rated voltage.
Excess voltage may result in malfunction or fire.

Never use the product with an AC power supply.
Otherwise, explosion may result.

The maximum power supply voltage is 30 VDC.
Before turning the power ON, make sure that the power supply voltage does not exceed the maximum voltage.

Do not use the product under a chemical or an oil environment without prior evaluation.

Precautions for Safe Use

Be sure to follow the safety precautions below for added safety.

1. Do not use the product in an environment where explosive or flammable gas is present.
2. The degree of protection is IP69K, but do not use the product in water, rain, or outdoors.
3. Do not use the product in atmospheres or environments that exceed product ratings.
4. Do not use the product in locations subject to direct sunlight.
5. Do not use the product in locations subject to direct vibration or shock.
6. Do not use thinner, alcohol, or other organic solvents. Otherwise, the optical properties and degree of protection may be degraded.
7. Do not attempt to disassemble, repair, or modify the product in any way.
8. When disposing of the product, treat it as industrial waste.
9. Do not use highly concentrated cleaning agents. Otherwise, malfunction may result. Also, do not use high-pressure water with a level of pressure that exceeds the stipulated level. Otherwise, the degree of protection may be reduced.
10. Perform sensitivity adjustment with the torque of 0.06 N·m or less.
11. Do not pull on the cable with excessive strength.
12. Do not exert excessive force on the connector section.
13. This product cannot be used as a detection system to protect human bodies.
14. These Sensors are certificated for the UL standard on the assumption of usage in a Class 2 circuit. Use them with Class 2 power supplies in the United States or Canada. Use the OMRON XS2F-D4-series or XS5F-D4-series Cables. Cables that have wires less than AWG24 (0.2 mm^2) are for connection to terminal blocks and are not for field splicing. External overcurrent protection of 1 A for AWG26, 2 A for AWG24, or 3 A for AWG22 wire must be provided for cable protection.

Precautions for Correct Use

1. If the Sensor wiring is placed in the same conduits or ducts as high-voltage or high-power lines, inductive noise may cause malfunction or damage. Wire the cables separately or use a shielded cable.
2. If a commercial switching regulator is used, ground the FG (frame ground) terminal.
3. The Sensor will be able to detect objects 100 ms after the power supply is tuned ON. Start using the Sensor 100 ms or more after turning ON the power supply. If the load and the Sensor are connected to separate power supplies, be sure to turn ON the Sensor first.
4. Output pulses may occur when the power supply is turned OFF. We recommend that you turn OFF the power supply to the load or load line first.
5. Use M4 screws to mount the sensor and tighten each screw to a maximum torque of 1.2 N·m.

Dimensions

(Unit: mm)
Tolerance class IT16 applies to dimensions in this data sheet unless otherwise specified.

Sensors

Pre-wired Models	Models with Pre-wired Connector
E3S-DBN1□(T)	E3S-DBN3□(T)
E3S-DBP1□(T)	E3S-DBP3□(T)

Smart Teaching Type

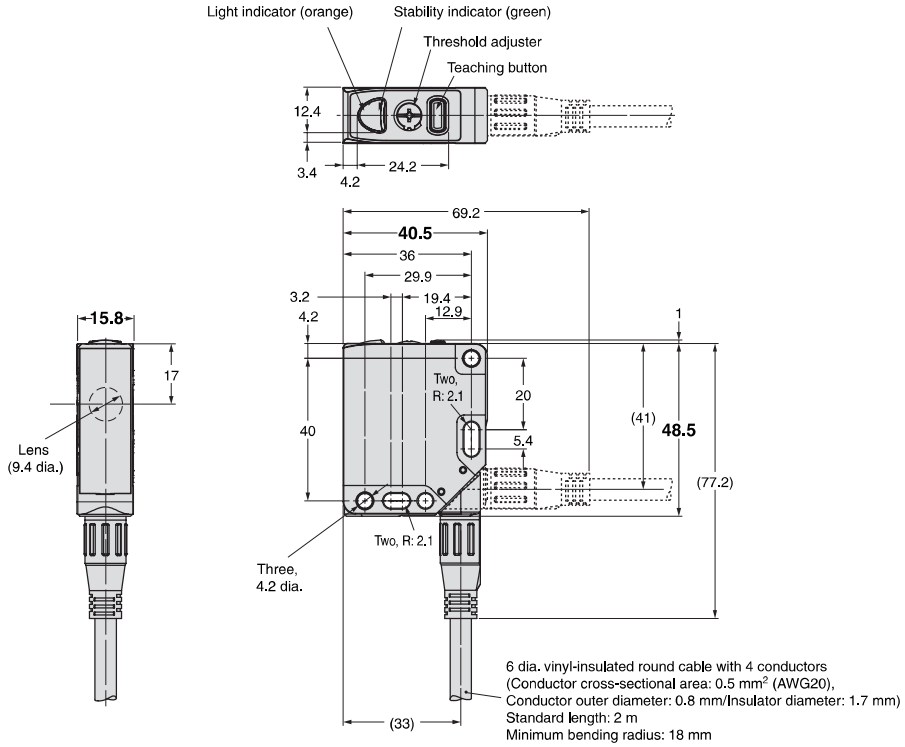

Mounting Holes

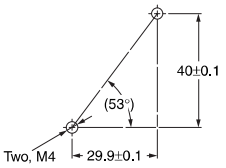

Connector on Models with Pre-wired Connector

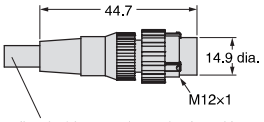

6 dia. vinyl-insulated round cable with 4 conductors (Conductor cross-sectional area: 0.5 mm² (AWG20), Conductor outer diameter: 0.8 mm/Insulator diameter: 1.7 mm)
Standard length: 0.3 m
Minimum bending radius: 18 mm

Connector Pin Arrangement

Pin No.	Application
①	Power supply (+V)
②	Output 2 (Dark ON)
③	Power supply (0 V)
④	Output 1 (Light ON)

Eleven-turn Adjuster Type

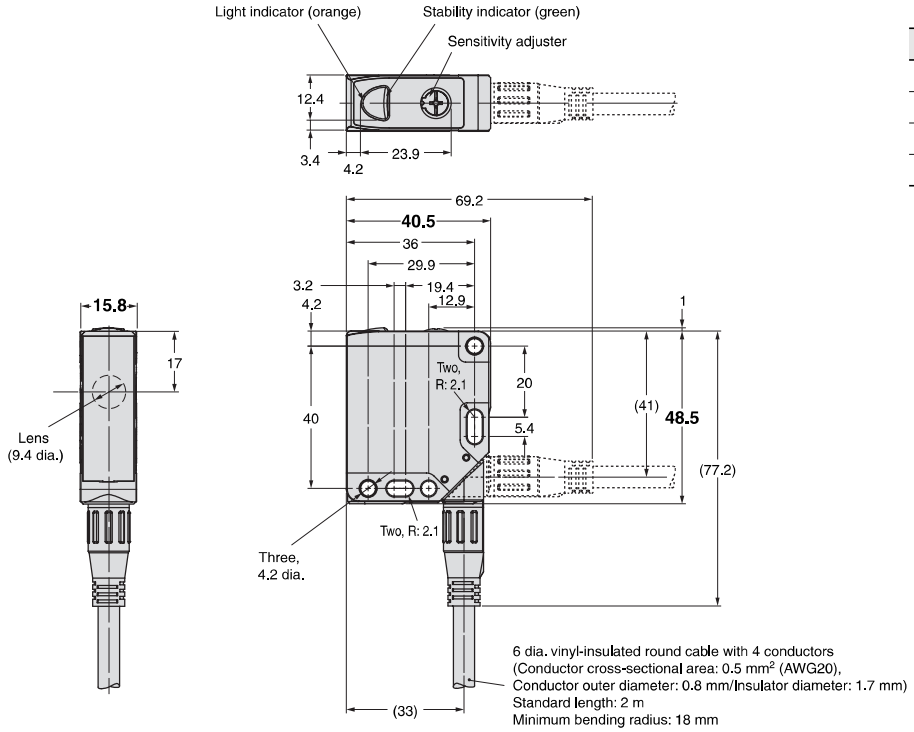

Models with M12 Connector
E3S-DBN2□(T)
E3S-DBP2□(T)

Smart Teaching Type

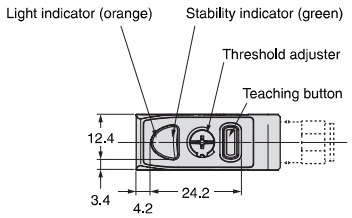

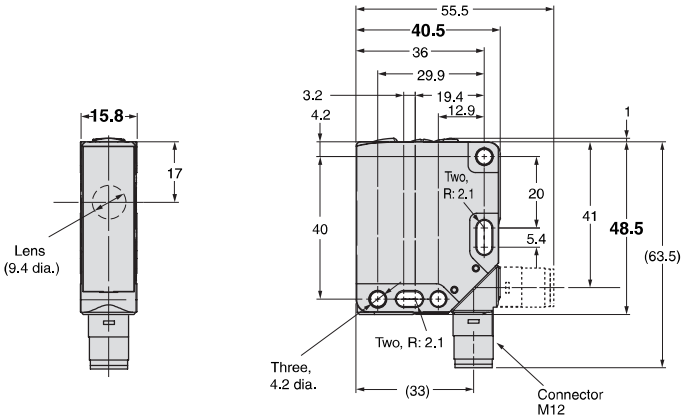

Mounting Holes

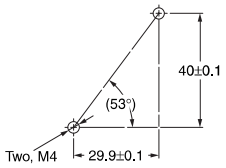

Connector Pin Arrangement

Pin No.	Application
①	Power supply (+V)
②	Output 2 (Dark ON)
③	Power supply (0 V)
④	Output 1 (Light ON)

Eleven-turn Adjuster Type

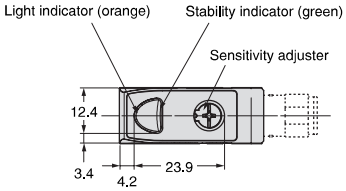

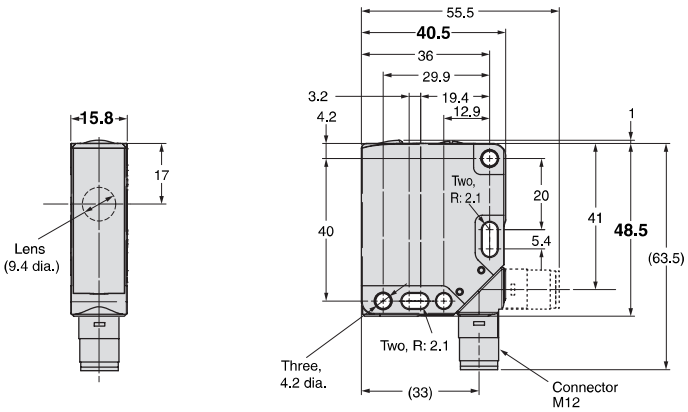

Accessories (Sold Separately)

Reflector
E39-R1S/E39-R1K*

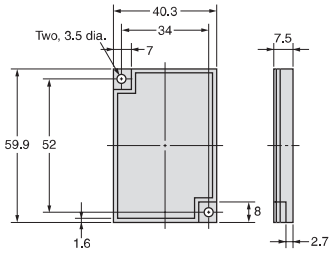

Materials: Reflective surface: Acrylic, Rear surface: ABS
* E39-R1K only
Coating on reflective surface

Special Polarizing Reflector
E39-RP1

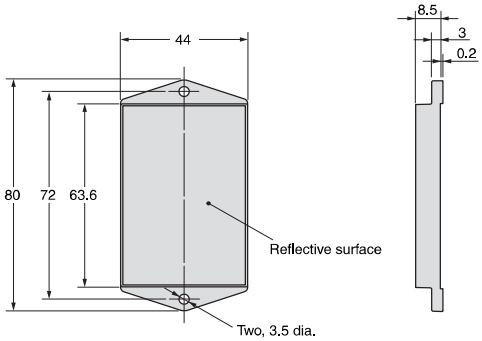

Materials: Reflective surface: Acrylic, Rear surface: ABS

Reflector
E39-R21

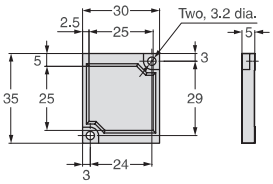

Materials: Reflective surface: Methacrylic resin (PMMA),
Rear surface: Polybutylene terephthalate (PBT)

Reflector
E39-R8

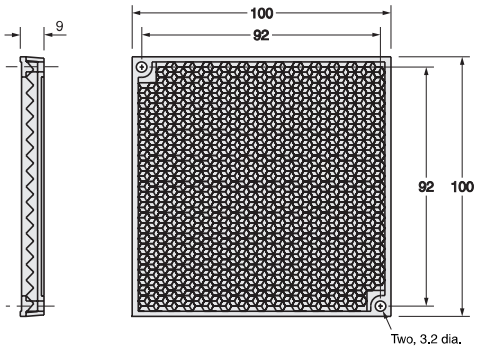

Materials: Reflective surface: Acrylic, Rear surface: ABS

Reflector
E39-RS10

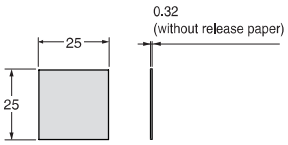

Materials: Reflective surface: Methacrylic resin (PMMA)

E39-RS11

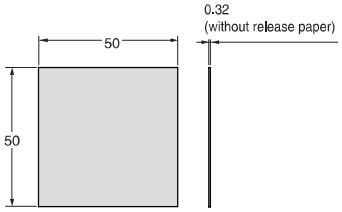

Materials: Reflective surface: Methacrylic resin (PMMA)

Mounting Brackets

E39-L192

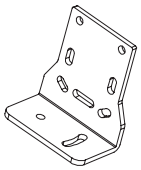

Material: SUS304

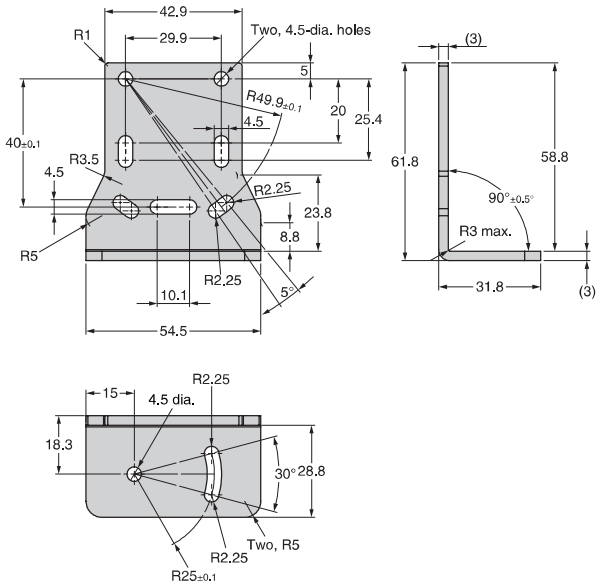

With Sensor Mounted

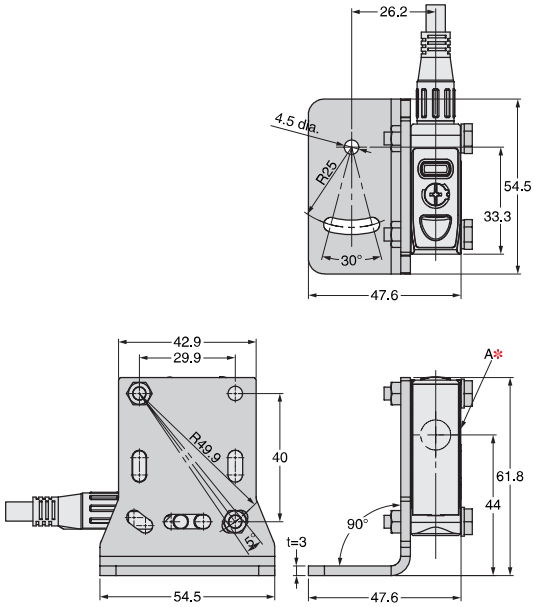

✻ The Mounting Bracket can be attached to side A.

E39-L193

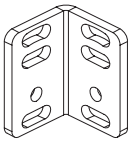

Material: SUS304

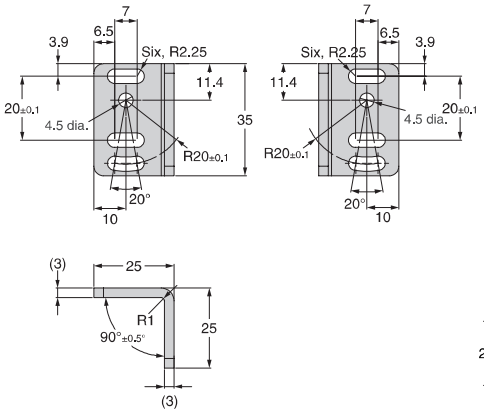

With Sensor Mounted

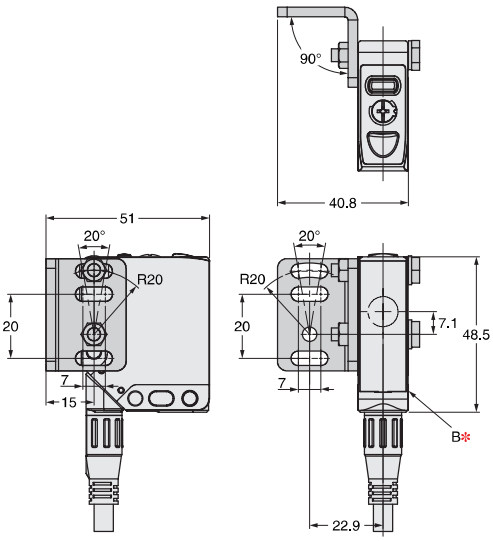

✻ The Mounting Bracket can be attached to side B.

MEMO

OMRON

Terms and Conditions of Sale

1. Offer; Acceptance. These terms and conditions (these "Terms") are deemed part of all quotes, agreements, purchase orders, acknowledgments, price lists, catalogs, manuals, brochures and other documents, whether electronic or in writing, relating to the sale of products or services (collectively, the "Products") by Omron Electronics LLC and its subsidiary companies ("Omron"). Omron objects to any terms or conditions proposed in Buyer's purchase order or other documents which are inconsistent with, or in addition to, these Terms.
2. Prices; Payment Terms. All prices stated are current, subject to change without notice by Omron. Omron reserves the right to increase or decrease prices on any unshipped portions of outstanding orders. Payments for Products are due net 30 days unless otherwise stated in the invoice.
3. Discounts. Cash discounts, if any, will apply only on the net amount of invoices sent to Buyer after deducting transportation charges, taxes and duties, and will be allowed only if (i) the invoice is paid according to Omron's payment terms and (ii) Buyer has no past due amounts.
4. Interest. Omron, at its option, may charge Buyer 1-1/2% interest per month or the maximum legal rate, whichever is less, on any balance not paid within the stated terms.
5. Orders. Omron will accept no order less than $200 net billing.
6. Governmental Approvals. Buyer shall be responsible for, and shall bear all costs involved in, obtaining any government approvals required for the importation or sale of the Products.
7. Taxes. All taxes, duties and other governmental charges (other than general real property and income taxes), including any interest or penalties thereon, imposed directly or indirectly on Omron or required to be collected directly or indirectly by Omron for the manufacture, production, sale, delivery, importation, consumption or use of the Products sold hereunder (including customs duties and sales, excise, use, turnover and license taxes) shall be charged to and remitted by Buyer to Omron.
8. Financial. If the financial position of Buyer at any time becomes unsatisfactory to Omron, Omron reserves the right to stop shipments or require satisfactory security or payment in advance. If Buyer fails to make payment or otherwise comply with these Terms or any related agreement, Omron may (without liability and in addition to other remedies) cancel any unshipped portion of Products sold hereunder and stop any Products in transit until Buyer pays all amounts, including amounts payable hereunder, whether or not then due, which are owing to it by Buyer. Buyer shall in any event remain liable for all unpaid accounts.
9. Cancellation; Etc. Orders are not subject to rescheduling or cancellation unless Buyer indemnifies Omron against all related costs or expenses.
10. Force Majeure. Omron shall not be liable for any delay or failure in delivery resulting from causes beyond its control, including earthquakes, fires, floods, strikes or other labor disputes, shortage of labor or materials, accidents to machinery, acts of sabotage, riots, delay in or lack of transportation or the requirements of any government authority.
11. Shipping; Delivery. Unless otherwise expressly agreed in writing by Omron:
    a. Shipments shall be by a carrier selected by Omron; Omron will not drop ship except in "break down" situations.
    b. Such carrier shall act as the agent of Buyer and delivery to such carrier shall constitute delivery to Buyer;
    c. All sales and shipments of Products shall be FOB shipping point (unless otherwise stated in writing by Omron), at which point title and risk of loss shall pass from Omron to Buyer; provided that Omron shall retain a security interest in the Products until the full purchase price is paid;
    d. Delivery and shipping dates are estimates only; and
    e. Omron will package Products as it deems proper for protection against normal handling and extra charges apply to special conditions.
12. Claims. Any claim by Buyer against Omron for shortage or damage to the Products occurring before delivery to the carrier must be presented in writing to Omron within 30 days of receipt of shipment and include the original transportation bill signed by the carrier noting that the carrier received the Products from Omron in the condition claimed.
13. Warranties. (a) Exclusive Warranty. Omron's exclusive warranty is that the Products will be free from defects in materials and workmanship for a period of twelve months from the date of sale by Omron (or such other period expressed in writing by Omron). Omron disclaims all other warranties, express or implied. (b) Limitations. OMRON MAKES NO WARRANTY OR REPRESENTATION, EXPRESS OR IMPLIED, ABOUT NON-INFRINGEMENT, MERCHANTABILITY OR FITNESS FOR A PARTICULAR PURPOSE OF THE PRODUCTS. BUYER ACKNOWLEDGES THAT IT ALONE HAS DETERMINED THAT THE PRODUCTS WILL SUITABLY MEET THE REQUIREMENTS OF THEIR INTENDED USE. Omron further disclaims all warranties and responsibility of any type for claims or expenses based on infringement by the Products or otherwise of any intellectual property right. (c) Buyer Remedy. Omron's sole obligation hereunder shall be, at Omron's election, to (i) replace (in the form originally shipped with Buyer responsible for labor charges for removal or replacement thereof) the non-complying Product, (ii) repair the non-complying Product, or (iii) repay or credit Buyer an amount equal to the purchase price of the non-complying Product; provided that in no event shall Omron be responsible for warranty, repair, indemnity or any other claims or expenses regarding the Products unless Omron's analysis confirms that the Products were properly handled, stored, installed and maintained and not subject to contamination, abuse, misuse or inappropriate modification. Return of any Products by Buyer must be approved in writing by Omron before shipment. Omron Companies shall not be liable for the suitability or unsuitability or the results from the use of Products in combination with any electrical or electronic components, circuits, system assemblies or any other materials or substances or environments. Any advice, recommendations or information given orally or in writing, are not to be construed as an amendment or addition to the above warranty. See http://www.omron247.com or contact your Omron representative for published information.
14. Limitation on Liability; Etc. OMRON COMPANIES SHALL NOT BE LIABLE FOR SPECIAL, INDIRECT, INCIDENTAL, OR CONSEQUENTIAL DAMAGES, LOSS OF PROFITS OR PRODUCTION OR COMMERCIAL LOSS IN ANY WAY CONNECTED WITH THE PRODUCTS, WHETHER SUCH CLAIM IS BASED IN CONTRACT, WARRANTY, NEGLIGENCE OR STRICT LIABILITY. Further, in no event shall liability of Omron Companies exceed the individual price of the Product on which liability is asserted.
15. Indemnities. Buyer shall indemnify and hold harmless Omron Companies and their employees from and against all liabilities, losses, claims, costs and expenses (including attorney's fees and expenses) related to any claim, investigation, litigation or proceeding (whether or not Omron is a party) which arises or is alleged to arise from Buyer's acts or omissions under these Terms or in any way with respect to the Products. Without limiting the foregoing, Buyer (at its own expense) shall indemnify and hold harmless Omron and defend or settle any action brought against such Companies to the extent based on a claim that any Product made to Buyer specifications infringed intellectual property rights of another party.
16. Property; Confidentiality. Any intellectual property in the Products is the exclusive property of Omron Companies and Buyer shall not attempt to duplicate it in any way without the written permission of Omron. Notwithstanding any charges to Buyer for engineering or tooling, all engineering and tooling shall remain the exclusive property of Omron. All information and materials supplied by Omron to Buyer relating to the Products are confidential and proprietary, and Buyer shall limit distribution thereof to its trusted employees and strictly prevent disclosure to any third party.
17. Export Controls. Buyer shall comply with all applicable laws, regulations and licenses regarding (i) export of products or information; (iii) sale of products to "forbidden" or other proscribed persons; and (ii) disclosure to non-citizens of regulated technology or information.
18. Miscellaneous. (a) Waiver. No failure or delay by Omron in exercising any right and no course of dealing between Buyer and Omron shall operate as a waiver of rights by Omron. (b) Assignment. Buyer may not assign its rights hereunder without Omron's written consent. (c) Law. These Terms are governed by the law of the jurisdiction of the home office of the Omron company from which Buyer is purchasing the Products (without regard to conflict of law principles). (d) Amendment. These Terms constitute the entire agreement between Buyer and Omron relating to the Products, and no provision may be changed or waived unless in writing signed by the parties. (e) Severability. If any provision hereof is rendered ineffective or invalid, such provision shall not invalidate any other provision. (f) Setoff. Buyer shall have no right to set off any amounts against the amount owing in respect of this invoice. (g) Definitions. As used herein, "including" means "including without limitation"; and "Omron Companies" (or similar words) mean Omron Corporation and any direct or indirect subsidiary or affiliate thereof.

Certain Precautions on Specifications and Use

1. Suitability of Use. Omron Companies shall not be responsible for conformity with any standards, codes or regulations which apply to the combination of the Product in the Buyer's application or use of the Product. At Buyer's request, Omron will provide applicable third party certification documents identifying ratings and limitations of use which apply to the Product. This information by itself is not sufficient for a complete determination of the suitability of the Product in combination with the end product, machine, system, or other application or use. Buyer shall be solely responsible for determining appropriateness of the particular Product with respect to Buyer's application, product or system. Buyer shall take application responsibility in all cases but the following is a non-exhaustive list of applications for which particular attention must be given:
   (i) Outdoor use, uses involving potential chemical contamination or electrical interference, or conditions or uses not described in this document.
   (ii) Use in consumer products or any use in significant quantities.
   (iii) Energy control systems, combustion systems, railroad systems, aviation systems, medical equipment, amusement machines, vehicles, safety equipment, and installations subject to separate industry or government regulations.
   (iv) Systems, machines and equipment that could present a risk to life or property. Please know and observe all prohibitions of use applicable to this Product.
   NEVER USE THE PRODUCT FOR AN APPLICATION INVOLVING SERIOUS RISK TO LIFE OR PROPERTY OR IN LARGE QUANTITIES WITHOUT ENSURING THAT THE SYSTEM AS A WHOLE HAS BEEN DESIGNED TO ADDRESS THE RISKS, AND THAT THE OMRON'S PRODUCT IS PROPERLY RATED AND INSTALLED FOR THE INTENDED USE WITHIN THE OVERALL EQUIPMENT OR SYSTEM.
2. Programmable Products. Omron Companies shall not be responsible for the user's programming of a programmable Product, or any consequence thereof.
3. Performance Data. Data presented in Omron Company websites, catalogs and other materials is provided as a guide for the user in determining suitability and does not constitute a warranty. It may represent the result of Omron's test conditions, and the user must correlate it to actual application requirements. Actual performance is subject to the Omron's Warranty and Limitations of Liability.
4. Change in Specifications. Product specifications and accessories may be changed at any time based on improvements and other reasons. It is our practice to change part numbers when published ratings or features are changed, or when significant construction changes are made. However, some specifications of the Product may be changed without any notice. When in doubt, special part numbers may be assigned to fix or establish key specifications for your application. Please consult with your Omron's representative at any time to confirm actual specifications of purchased Product.
5. Errors and Omissions. Information presented by Omron Companies has been checked and is believed to be accurate; however, no responsibility is assumed for clerical, typographical or proofreading errors or omissions.

OMRON
AUTOMATION & SAFETY

OMRON AUTOMATION AND SAFETY • THE AMERICAS HEADQUARTERS • Chicago, IL USA • 847.843.7900 • 800.556.6766 • www.omron247.com

OMRON CANADA, INC. • HEAD OFFICE
Toronto, ON, Canada • 416.286.6465 • 866.986.6766 • www.omron247.com

OMRON ELECTRONICS DE MEXICO • HEAD OFFICE
México DF • 52.55.59.01.43.00 • 01-800-226-6766 • mela@omron.com

OMRON ELECTRONICS DE MEXICO • SALES OFFICE
Apodaca, N.L. • 52.81.11.56.99.20 • 01-800-226-6766 • mela@omron.com

OMRON ELETRÔNICA DO BRASIL LTDA • HEAD OFFICE
São Paulo, SP, Brasil • 55.11.2101.6300 • www.omron.com.br

OMRON ARGENTINA • SALES OFFICE
Cono Sur • 54.11.4783.5300

OMRON CHILE • SALES OFFICE
Santiago • 56.9.9917.3920

OTHER OMRON LATIN AMERICA SALES
54.11.4783.5300

OMRON EUROPE B.V. • Wegalaan 67-69, NL-2132 JD, Hoofddorp, The Netherlands. • +31 (0) 23 568 13 00 • www.industrial.omron.eu

Authorized Distributor:

Automation Control Systems
• Machine Automation Controllers (MAC) • Programmable Controllers (PLC)
• Operator interfaces (HMI) • Distributed I/O • Software

Drives & Motion Controls
• Servo & AC Drives • Motion Controllers & Encoders

Temperature & Process Controllers
• Single and Multi-loop Controllers

Sensors & Vision
• Proximity Sensors • Photoelectric Sensors • Fiber-Optic Sensors
• Amplified Photomicrosensors • Measurement Sensors
• Ultrasonic Sensors • Vision Sensors

Industrial Components
• RFID/Code Readers • Relays • Pushbuttons & Indicators
• Limit and Basic Switches • Timers • Counters • Metering Devices
• Power Supplies

Safety
• Laser Scanners • Safety Mats • Edges and Bumpers • Programmable Safety Controllers • Light Curtains • Safety Relays • Safety Interlock Switches

E439-E1-01 07/15 Note: Specifications are subject to change. © 2015 Omron Electronics LLC Printed in U.S.A.

Printed on recycled paper.