Wireless position switch
RF 10 H SW915
Material number: 1209282 (Material number old: 10120701)

Features/Options:

- Thermoplastic enclosure
- sWave® wireless technology
- No wiring and pipe laying required
- Power supply by Lithium battery
- Easy programming of receiver
- Output signal can be individually configurated at the receiver

Dimensions

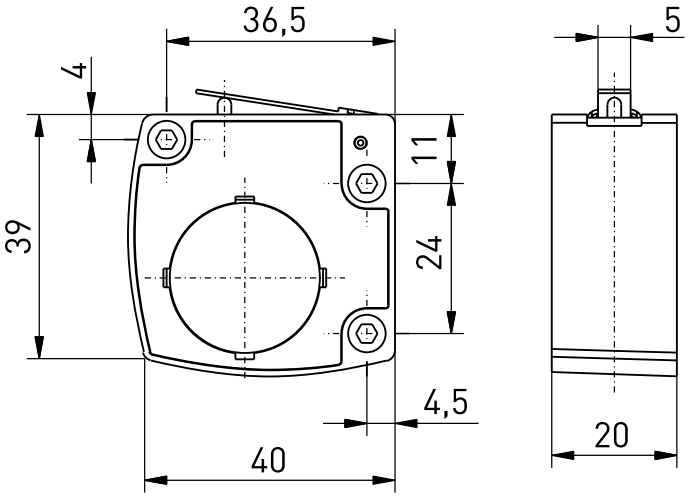

Technical data

Standards	EN 60947-5-1; EN 61000-6-2, -6-3, EN 61000-4-2, -4-20; EN 301 489-1; EN 301 489-3; EN 300 220-1; EN 300 220-2
Enclosure	glass-fibre reinforced, shock-proof thermoplastic (PA 66), self-extinguishing UL 94-V0
Tightening torque	max. 0.5 ... 0.6 Nm
Degree of protection	IP 67 to IEC/EN 60529
Protocol	sWave®
Ambient temperature	–20 °C … +65 °C
Operation cycles	approx. 12000 telegrams at repetitions/h
Voltage supply	Lithium-battery CR 2032 (replaceable)
Frequency	915 MHz (USA, Canada and Mexico)
Transmission power	< 10 mW
Data rate	66 kbps
Channel bandwidth	550 kHz
Wireless range	max. 450 m outside, max. 40 m inside
Mechanical life	> 1 million operations
Battery life	> 800 000 operations
Actuating time	min. 80 ms
Note	no status signal available
Approvals	USA: FCC - XK5-RFRXSW915; Canada: IC - 5158A-RFRXSW915; Mexico: IFT - RCPSTRF17-1886

steute Technologies GmbH & Co. KG | Brückenstraße 91 32584 Löhne, Deutschland | Telefon +49 (0) 5731 745-0 Telefax +49 (0) 5731 745-200 | info@steute.com www.steute.com

Wireless position switch
RF 10 H SW915
Material number: 1209282 (Material number old: 10120701)

Switching diagram

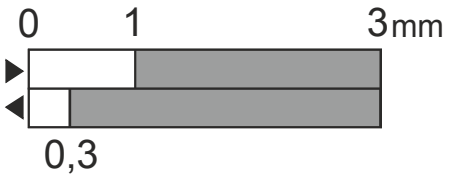

steute Technologies GmbH & Co. KG
Brückenstraße 91
32584 Löhne, Deutschland
Telefon +49 (0) 5731 745-0
Telefax +49 (0) 5731 745-200
info@steute.com
www.steute.com