Alle Rechte vorbehalten/ *All rights reserved*

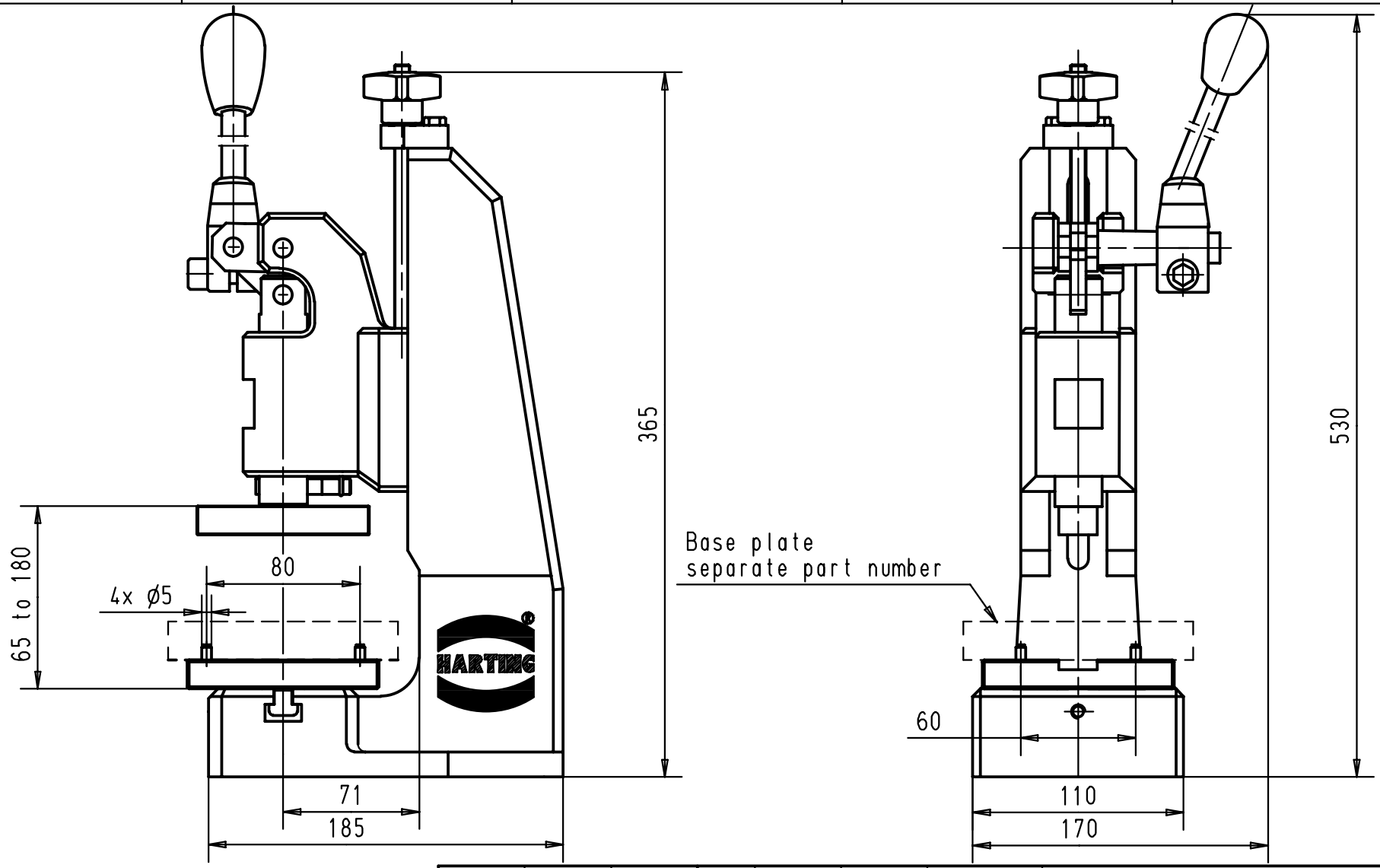

Maximum force output: 4,2 kN

				Dat.	Name	
			Detail.	12 JUL 01	S G	All Dim. in mm Orig. Size DIN A 4
			Insp.			
			Stand.			
29699	12 JUL 01	S G				
Mod.	Dat.	Name				

HARTING EURL
F-95972 Paris

Bench press for IDC cabling

Maßstab/ *Scale* 1:3

TB 09 99 000 0114

Sub.

Blatt/ *Page* 1/1