SMART
SENSOR
BUSINESS

Leuze electronic

the sensor people

Figure can vary

Part no.: 63000721
AC-AH-A
Actuator

Contents

- Technical data
- Dimensioned drawings

Leuze electronic GmbH + Co. KG, In der Braike 1, 73277 Owen
Phone: +49 7021 573-0, Fax: +49 7021 573-199

Part no.: 63000721 – AC-AH-A – Actuator

Technical data

Mechanical data	
Dimension (W x H x L)	30 mm x 32.3 mm x 41.3 mm
Net weight	20 g
Type of fastening	Through-hole mounting
Design, actuator	Angled
Area of application, actuator	Heavy duty
Mounting bore holes	In key direction
Material	Stainless steel

Classification	
Customs tariff number	85369095
eCl@ss 8.0	27279216
eCl@ss 9.0	27272606
ETIM 5.0	EC001487
ETIM 6.0	EC001487

Dimensioned drawings
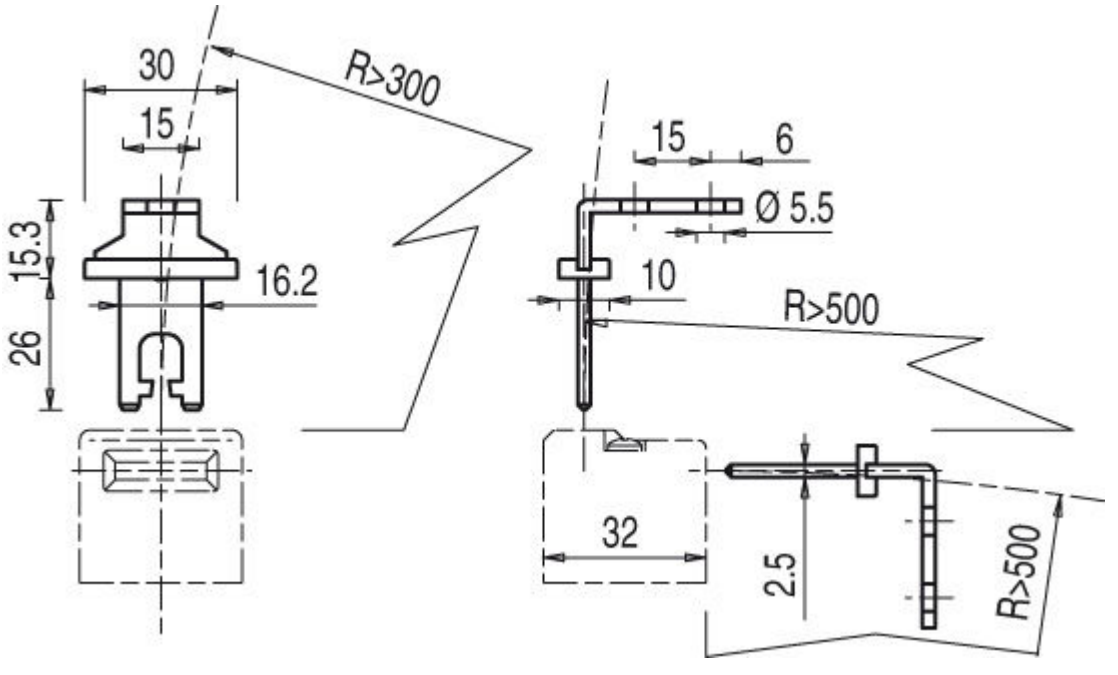
All dimensions in millimeters