Board Level Cooling – M45

BOARD LEVEL COOLING – M45

Max Clip standards are designed to be a labor saving option for board level cooling. Max Clip standard work with multiple devices and can be customized for specific applications. See Max Clip Standard Part Numbering to build your semi-custom heat sink. Representative Image Only.

Benefits:

Labor Saving

- ***Cost Efficient – Add a clip and thermal interface material***
- ***Time Saver – Easy assemble before wave soldering***
- ***Customizable – Solder pins, interface material, length & clip***

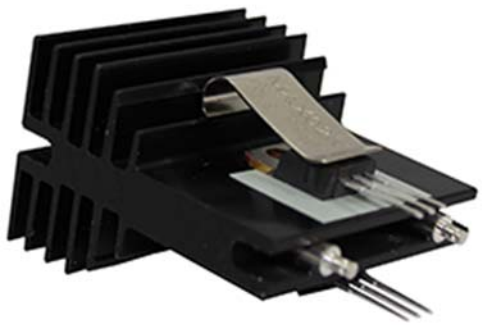

ORDERING INFORMATION

Part Number	Device Type
M45165B021000G	TO-247, TO-220, TO-126

HEAT SINK DETAILS

Property	Details
Material	Aluminum
Finish	Black Anodize
Device Attachment Options	Two Solderable Pins
Thermal Interface Material	-

Property	Details
Heat Sink Width (mm)	30 (1.18)
Heat Sink Length (mm)	41.91 (1.65)
Heat Sink Height (mm)	50.50 (1.988)
Heat Sink Mounting Direction	Vertical, Horizontal

Clips are sold separately. For additional order information please see Max Clip Standard Part Numbering System. Aavid reserves the right to make changes to products or information contained herein without noticed. For additional information, please contact Aavid directly.

MECHANICAL & PERFORMANCE

Drawing dimensions are shown in mm, (in)

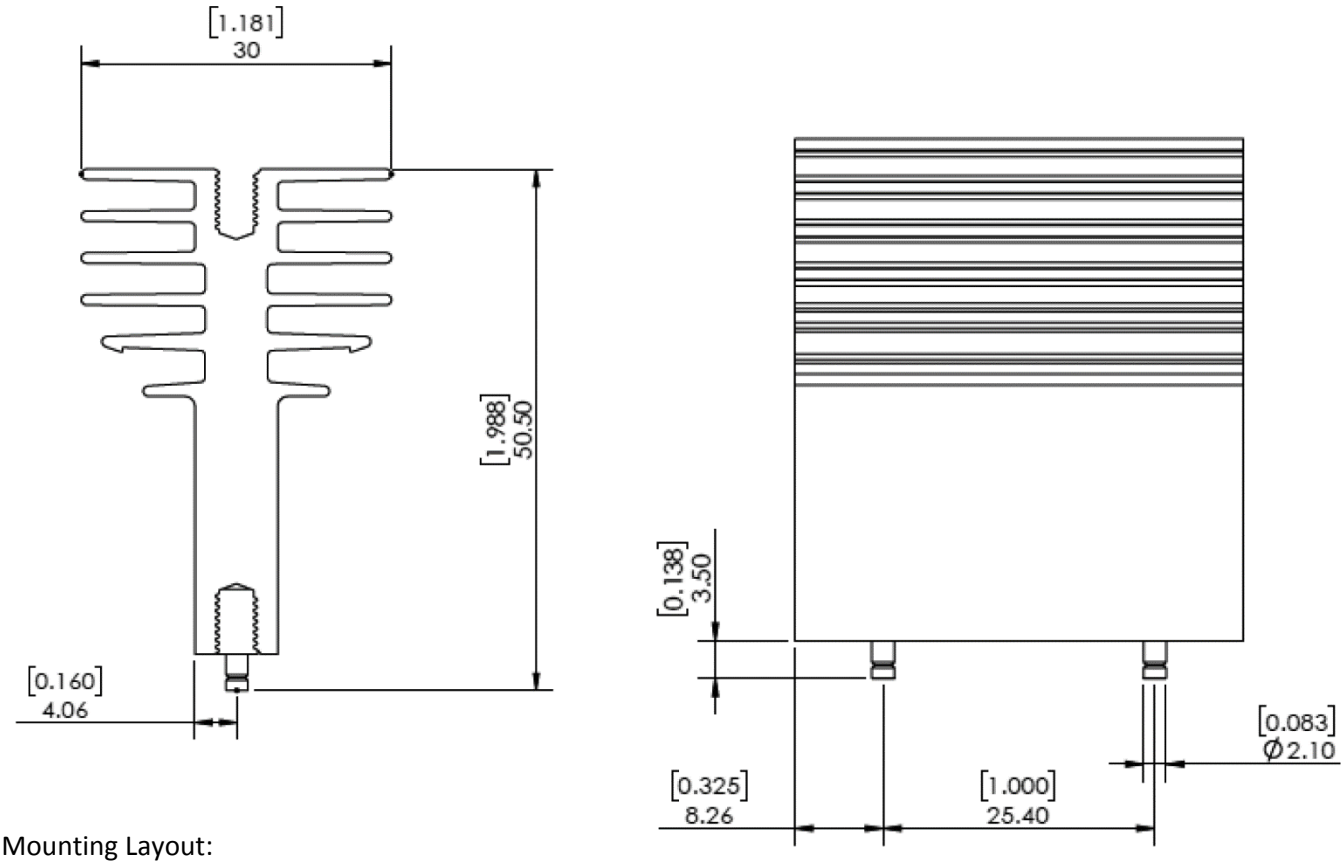

Board Mounting Layout:

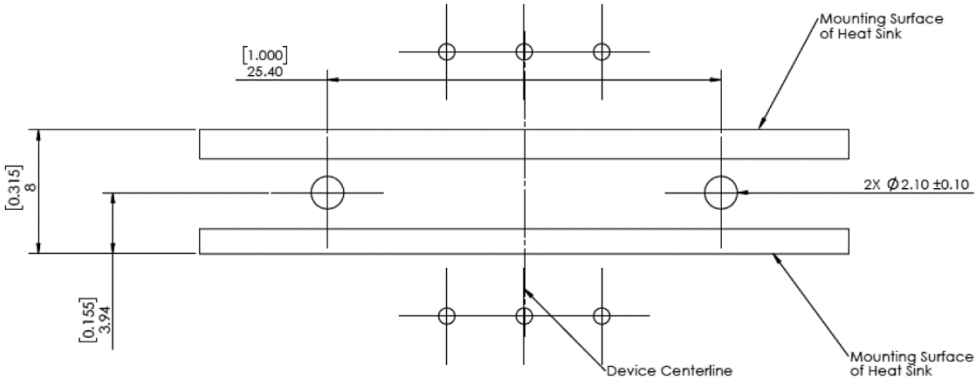

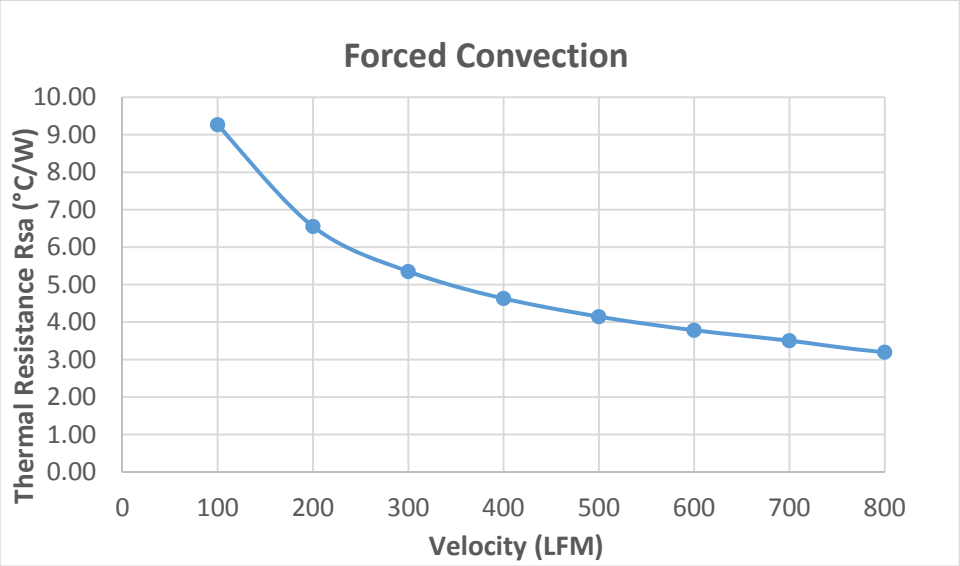
Forced Convection
Thermal Resistance Rsa (°C/W)
10.00
9.00
8.00
7.00
6.00
5.00
4.00
3.00
2.00
1.00
0.00
0
100
200
300
400
500
600
700
800
Velocity (LFM)

Board Level Cooling – M46

BOARD LEVEL COOLING – M46

Max Clip standards are designed to be a labor saving option for board level cooling. Max Clip standard work with multiple devices and can be customized for specific applications. See Max Clip Standard Part Numbering to build your semi-custom heat sink. Representative Image Only.

Benefits:

Labor Saving

- ***Cost Efficient – Add a clip and thermal interface material***
- ***Time Saver – Easy assemble before wave soldering***
- ***Customizable – solder pins, interface material, length & clip***

ORDERING INFORMATION

Part Number	Device Type
M46165B021000G	TO-247, TO-220, TO-126

HEAT SINK DETAILS

Property	Details
Material	Aluminum
Finish	Black Anodize
Device Attachment Options	Two Solderable Pins
Thermal Interface Material	-

Property	Details
Heat Sink Width (mm)	30 (1.18)
Heat Sink Length (mm)	41.91 (1.65)
Heat Sink Height (mm)	48.50 (1.909)
Heat Sink Mounting Direction	Vertical, Horizontal

Clips are sold separately. For additional order information please see Max Clip Standard Part Numbering System. Aavid reserves the right to make changes to products or information contained herein without noticed. For additional information, please contact Aavid directly.

MECHANICAL & PERFORMANCE

Drawing dimensions are shown in mm, (in)

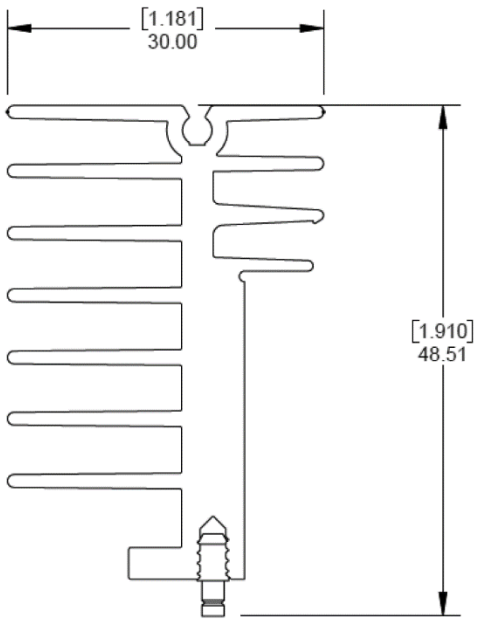

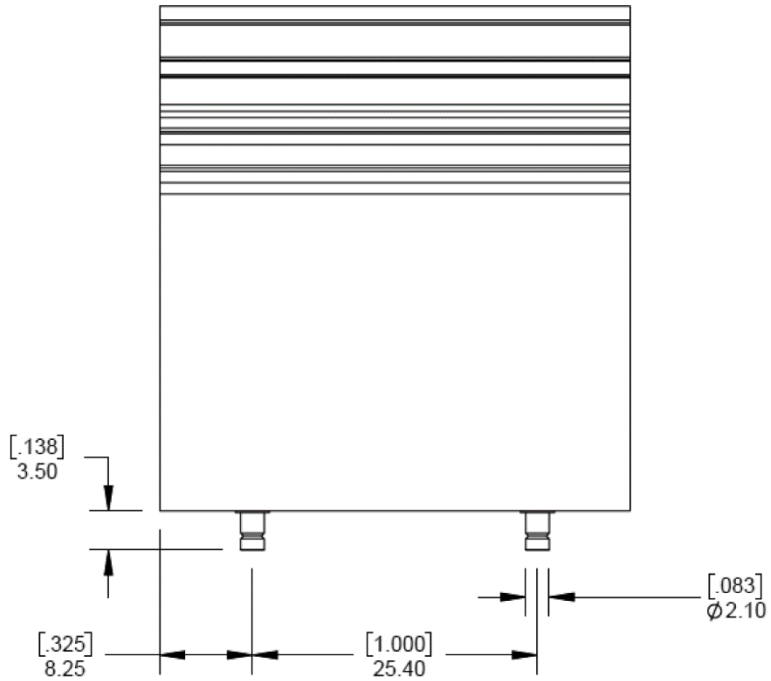

Board Mounting Layout:

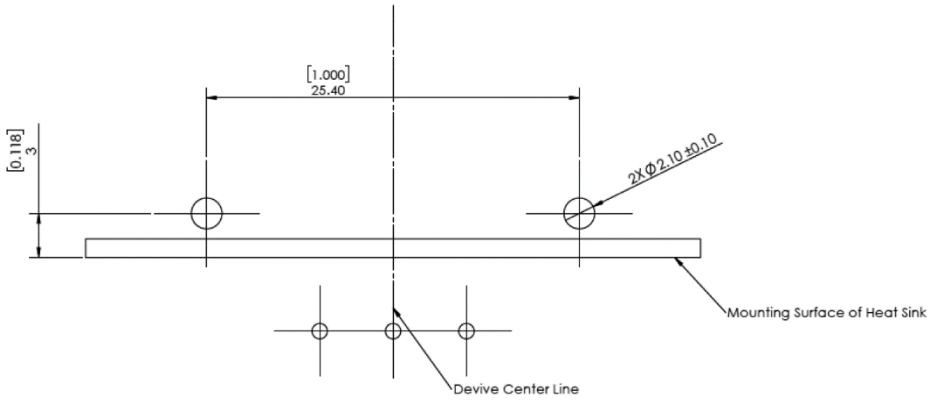

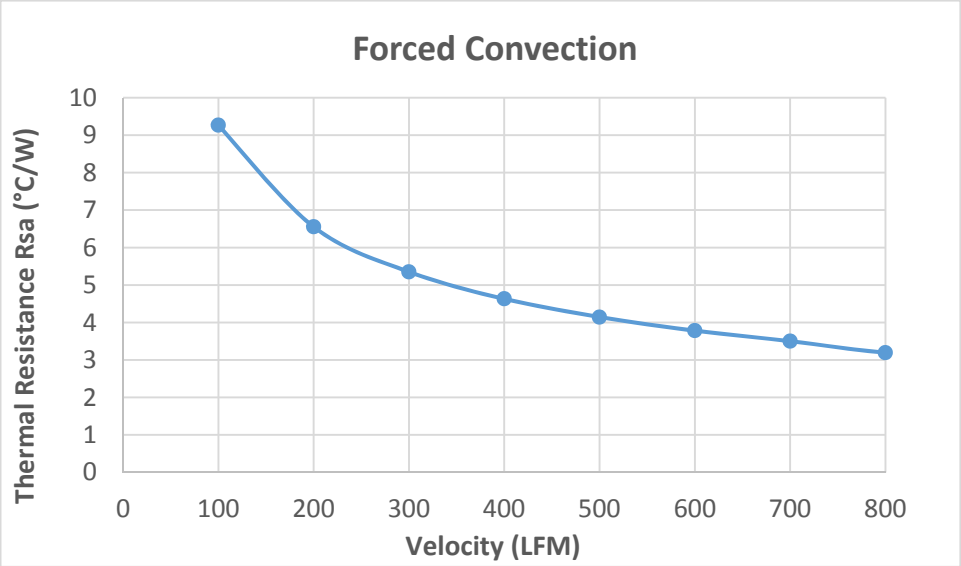
Forced Convection
Thermal Resistance Rsa (°C/W)
10
9
8
7
6
5
4
3
2
1
0
0
100
200
300
400
500
600
700
800
Velocity (LFM)

Board Level Cooling – M47

BOARD LEVEL COOLING – M47

Max Clip standards are designed to be a labor saving option for board level cooling. Max Clip standard work with multiple devices and can be customized for specific applications. See Max Clip Standard Part Numbering to build your semi-custom heat sink. Representative Image Only.

Benefits:

Labor Saving

- ***Cost Efficient – Integrated clip designed into heat sink***
- ***Time Saver – Easy assemble before wave soldering***
- ***Customizable – Solder pins and length***

ORDERING INFORMATION

Part Number	Device Type
M47059B011000G	TO-247, TO-220, TO-126
M47079B011000G	TO-247, TO-220, TO-126
M47098B011000G	TO-247, TO-220, TO-126
M47118B021000G	TO-247, TO-220, TO-126

HEAT SINK DETAILS

Property	Details
Material	Aluminum
Finish	Black Anodize
Device Attachment Options	Solderable Pins
Thermal Interface Material	-

Property	Details
Heat Sink Width (mm)	19.4 (0.763)
Heat Sink Length (mm)	See Below Table
Heat Sink Height (mm)	31.5 (1.240)
Heat Sink Mounting Direction	Vertical, Horizontal

For additional order information please see Max Clip Standard Part Numbering System. Aavid reserves the right to make changes to products or information contained herein without noticed. For additional information, please contact Aavid directly.

MECHANICAL & PERFORMANCE

Drawing dimensions are shown in mm, (in)

Part Number	Length
M47059B011000G	14.99 (0.59)
M47079B011000G	20.07 (0.79)
M47098B011000G	24.89 (0.98)
M47118B021000G	30.15 (1.18)

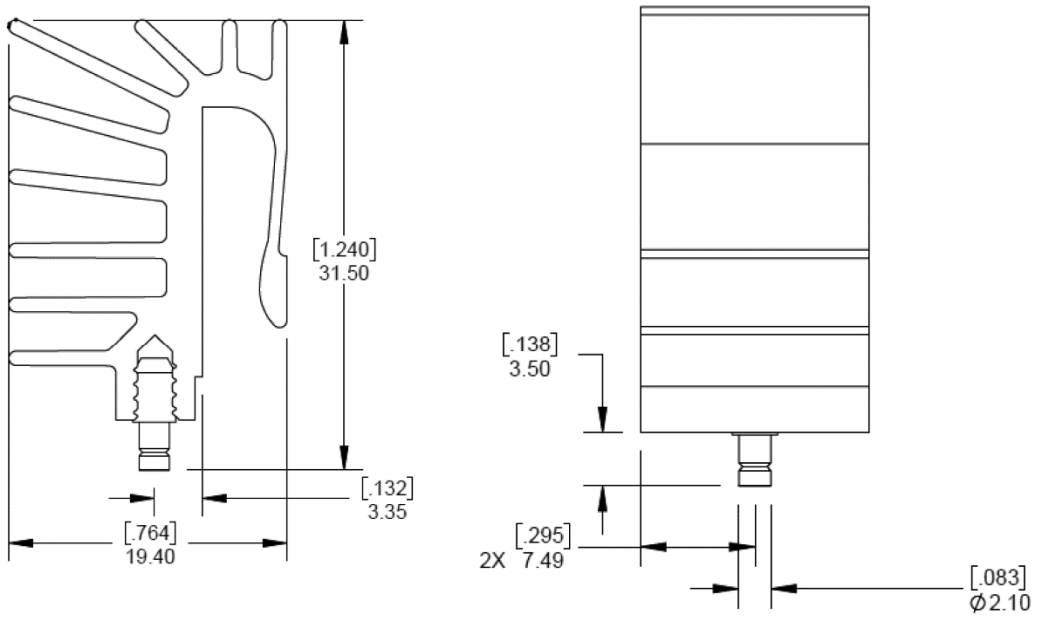

Board Mounting Layout:

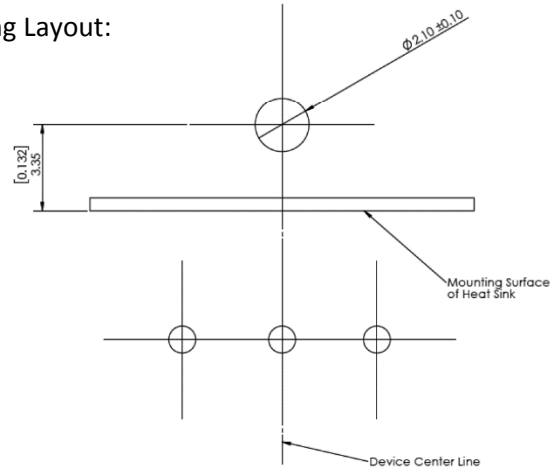

Part Number: M47059B011000G

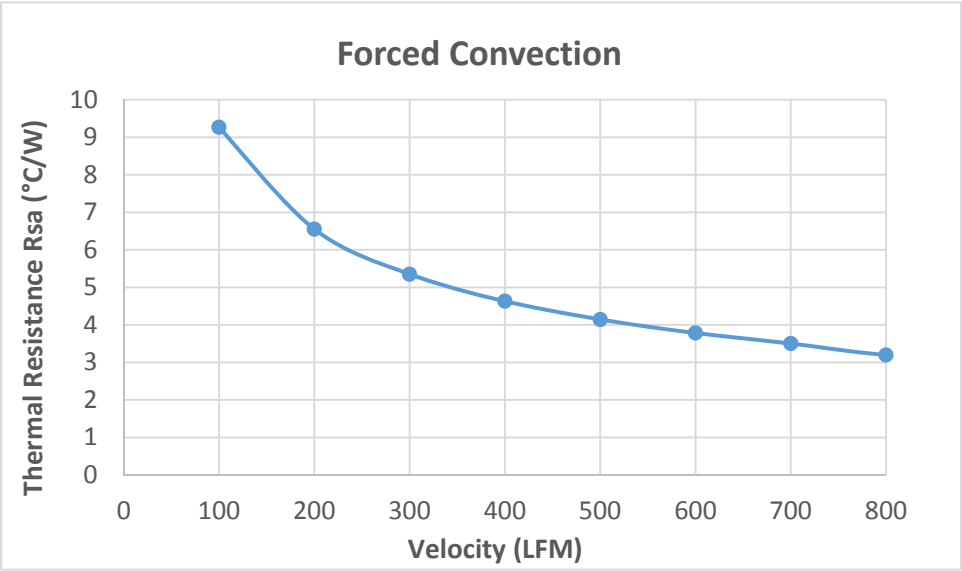

Part Number: M47079B011000G

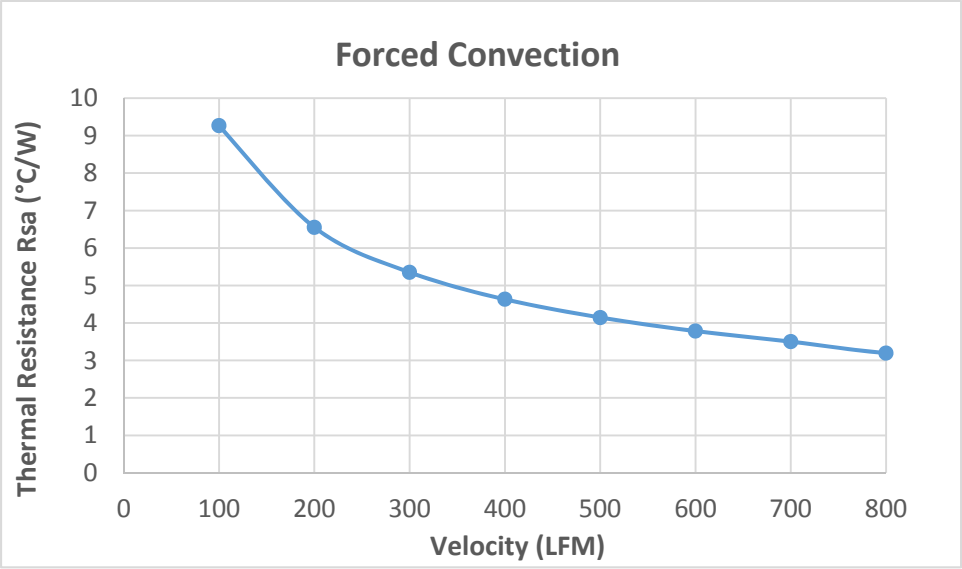

Part Number: M47098B011000G

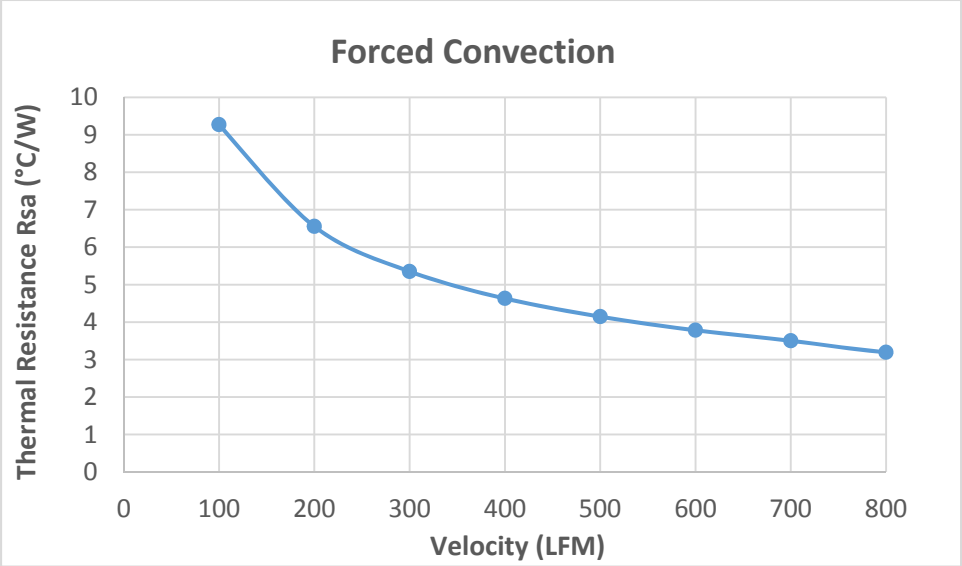

Part Number: M47079B011000G

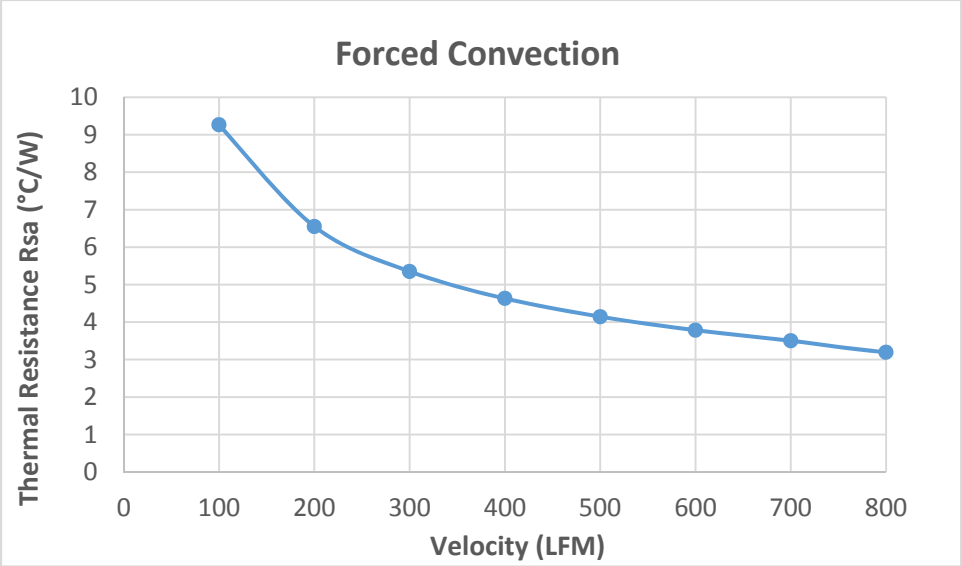

Board Level Cooling – M48

BOARD LEVEL COOLING – M48

Max Clip standards are designed to be a labor saving option for board level cooling. Max Clip standard work with multiple devices and can be customized for specific applications. See Max Clip Standard Part Numbering to build your semi-custom heat sink. Representative Image Only.

Benefits:

Labor Saving

- ***Cost Efficient – Integrated clip designed into heat sink***
- ***Time Saver – Easy assemble before wave soldering***
- ***Customizable – Solder pins and length***

ORDERING INFORMATION

Part Number	Device Type
M48059B011000G	TO-247, TO-220, TO-126
M48079B011000G	TO-247, TO-220, TO-126
M48098B011000G	TO-247, TO-220, TO-126
M48118B021000G	TO-247, TO-220, TO-126

HEAT SINK DETAILS

Property	Details
Material	Aluminum
Finish	Black Anodize
Device Attachment Options	One-Two Solderable Pins
Thermal Interface Material	-

Property	Details
Heat Sink Width (mm)	22.00 (0.866)
Heat Sink Length (mm)	See below table
Heat Sink Height (mm)	38.5 (1.515)
Heat Sink Mounting Direction	Vertical, Horizontal

For additional order information please see Max Clip Standard Part Numbering System. Aavid reserves the right to make changes to products or information contained herein without noticed. For additional information, please contact Aavid directly.

MECHANICAL & PERFORMANCE

Drawing dimensions are shown in mm, (in)

Part Number	Length
M48059B011000G	14.99 (0.59)
M48079B011000G	20.07 (0.79)
M48098B011000G	24.89 (0.98)
M48118B021000G	30.15 (1.18)

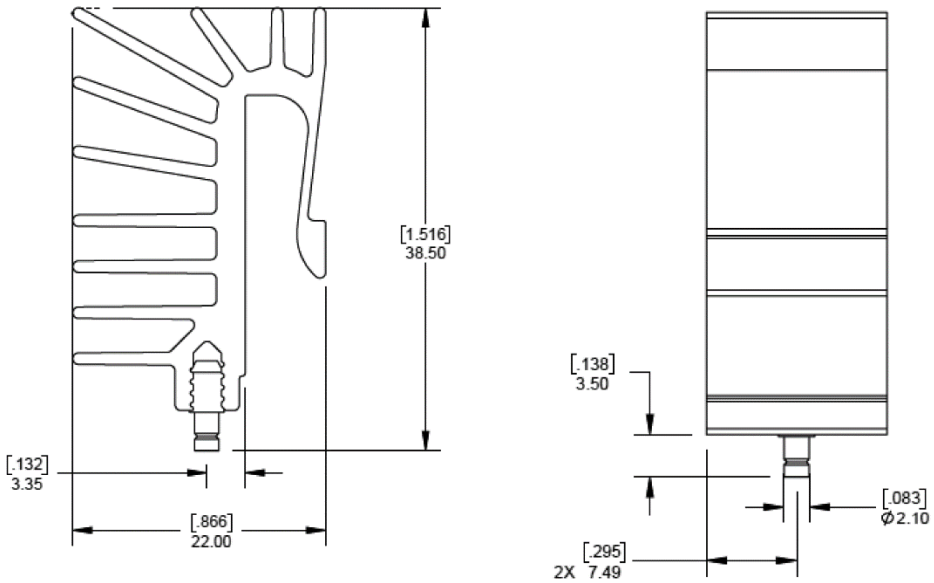

Board Mounting Layout:

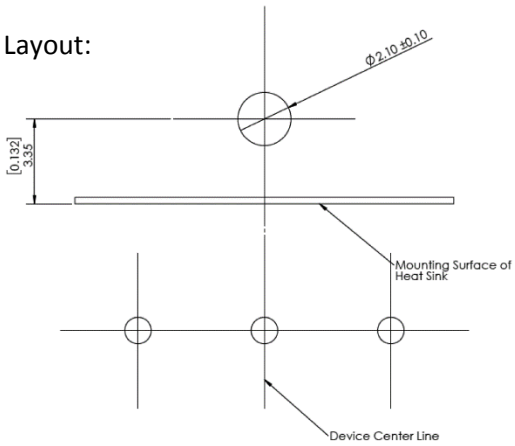

Part Number: M48079B011000G

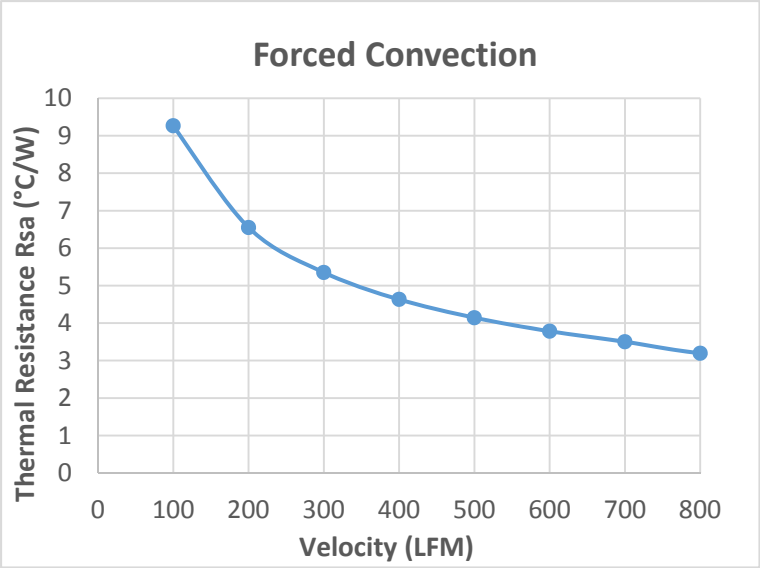

Part Number: M48059B011000G

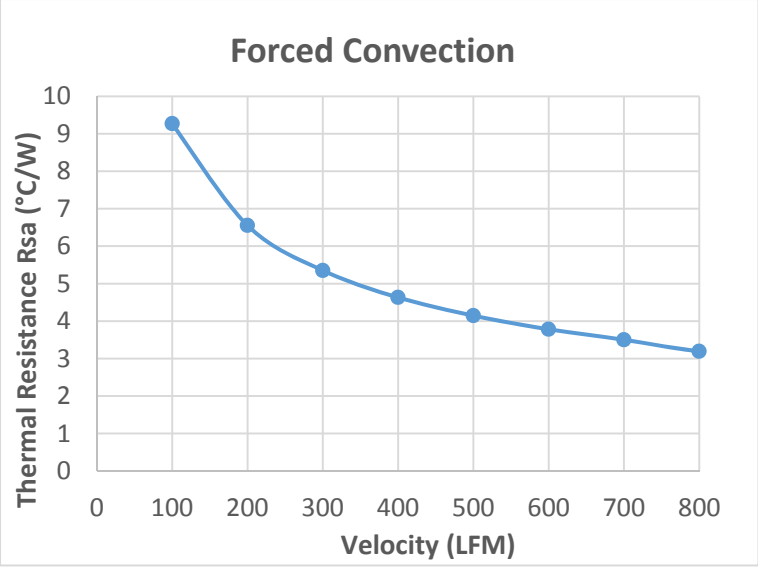

Part Number: M48098B011000G

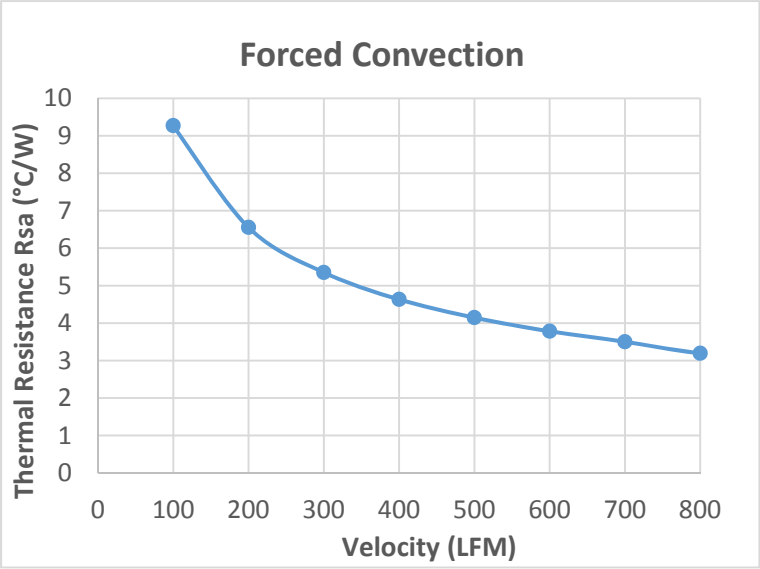

Part Number: M48118B021000G

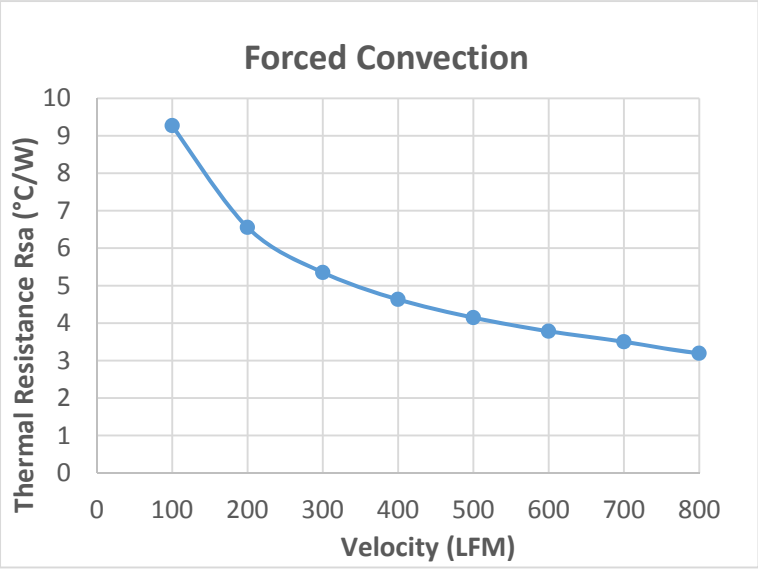

Board Level Cooling – M49

BOARD LEVEL COOLING – M49

Max Clip standards are designed to be a labor saving option for board level cooling. Max Clip standard work with multiple devices and can be customized for specific applications. See Max Clip Standard Part Numbering to build your semi-custom heat sink. Representative Image Only.

Benefits:

Labor Saving

- ***Cost Efficient – Add a clip and thermal interface material***
- ***Time Saver – Easy assemble before wave soldering***
- ***Customizable – Solder pins, interface material, length & clip***

ORDERING INFORMATION

Part Number	Device Type
M49138B011000G	TO-247, TO-220, TO-126
M49165B021000G	TO-247, TO-220, TO-126

HEAT SINK DETAILS

Property	Details
Material	Aluminum
Finish	Black Anodize
Device Attachment Options	Solderable Pins
Thermal Interface Material	-

Property	Details
Heat Sink Width (mm)	22.00 (0.866)
Heat Sink Length (mm)	See Below Table
Heat Sink Height (mm)	32.00 (1.26)
Heat Sink Mounting Direction	Vertical, Horizontal

Clips are sold separately. For additional order information please see Max Clip Standard Part Numbering System. Aavid reserves the right to make changes to products or information contained herein without noticed. For additional information, please contact Aavid directly.

Board Level Cooling – M49

MECHANICAL & PERFORMANCE

Drawing dimensions are shown in mm, (in)

Part Number	"X" Dim
M49138B011000G	35.05 (1.38)
M49165B021000G	41.91 (1.65)

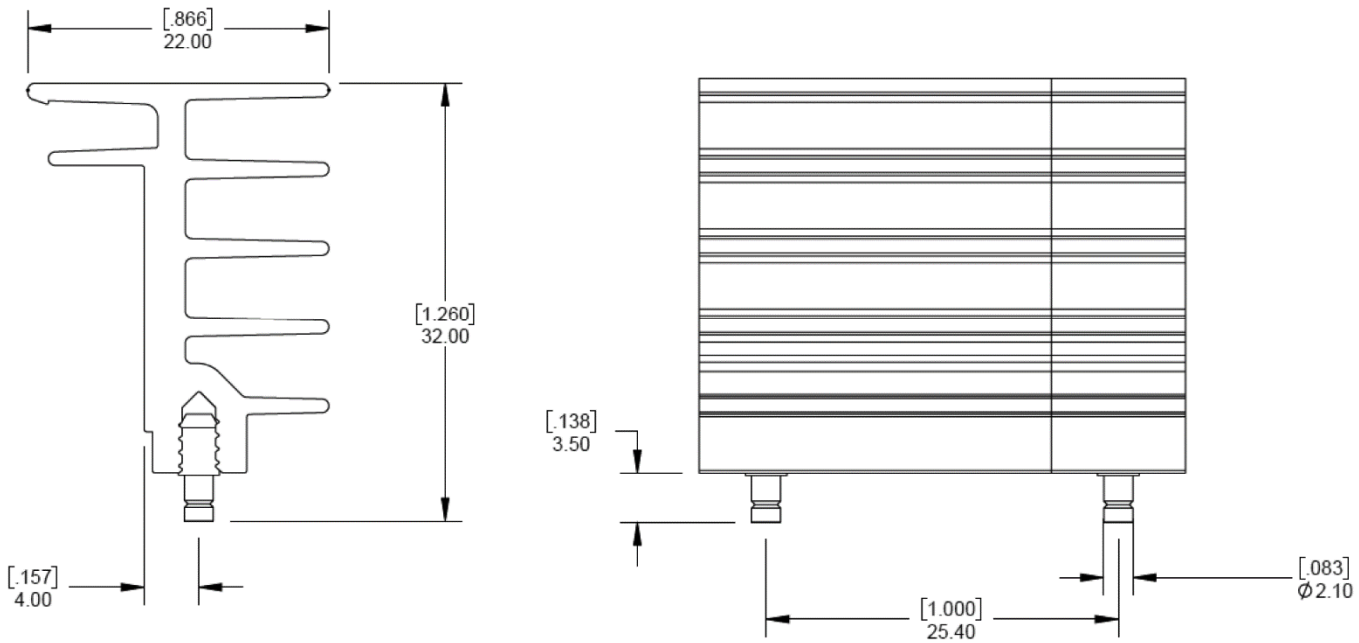

Board Mounting Layout:

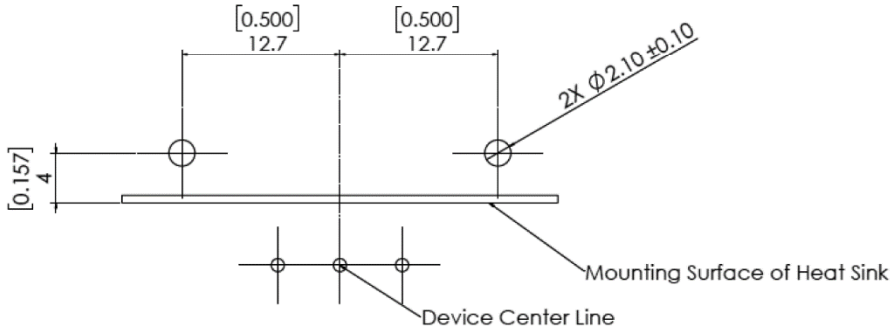

Part Number: M49138B011000G

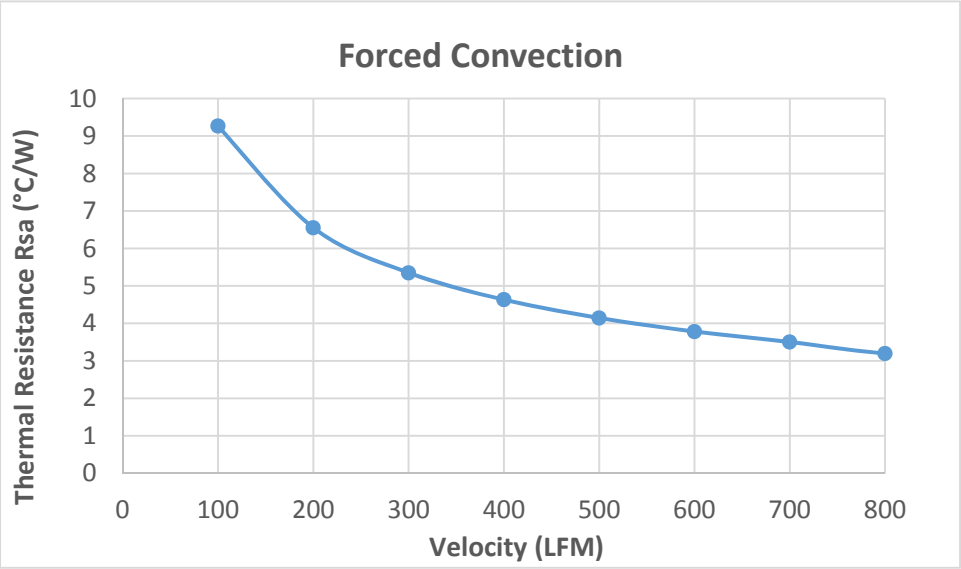

Part Number: M49165B021000G

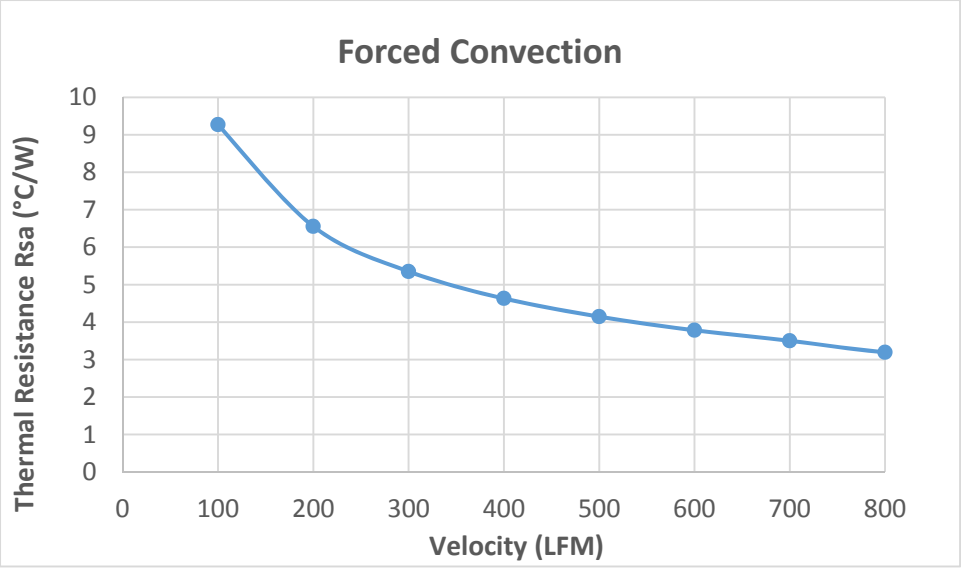

Max Clip Standard Part Numbering System

HOW TO BUILD AN AAVID MAX CLIP STANDARD PART NUMBER

Aavid's Max Clip Standard part numbering system consists of a 14-digit part number sequence. In the standard offerings, Category A or the first digit refers to the series which is defaulted as "M". The following 2nd and 3rd digits are Category B which defines the base profile of the Max Clip part. Digits 4-6, Category C refers to cut length. The decimal point is assumed between the 4th and 5th digit. Standard parts for the Max Clip parts can be quoted in lengths under 10" any longer lengths will be quoted custom.

Category D is digit 7 and refers to the finish, followed by digit 8 or Category E which defines the thermal interface material. The 9th and 10th digits or Category F calls out the number of pins and the pin type for board mounting. The last sequence of the part number are the device mounting or Category G, digits 11-13 and refer to the number of clips and the Max Clip type.

CATEGORY B - DIGITS 2-3: BASE PROFILE

Code	Base Extrusion	Height	Width	Dual Mount
45	78020	51.00 (2.008 in)	30.00 (1.181 in)	Y
46	78060	48.36 (1.904 in)	30.00 (1.181 in)	N
47	78065	30.80 (1.212 in)	18.85 (0.742 in)	N
48	78240	38.58 (1.519 in)	21.94 (0.864 in)	N
49	78265	31.36 (1.235 in)	22.00 (0.866 in)	N

CATEGORY D – DIGIT 7: FINISH

Code	Description
B	Black anodize
U	Unfinished / Wash
V	AavSHIELD3 – RoHS compliant hexavalent chromate finish

PART NUMBERING GUIDE

A	(Digits 1) =	Series name M
B	(Digits 2-3) =	Base Profile
C	(Digit 4-6) =	Cut Length
D	(Digit 7) =	Finish
E	(Digits 8) =	Thermal Interface Material
F	(Digits 9-10) =	Board Mounting
G	(Digit 11-13) =	Device Mounting
H	(Digits 14) =	RoHS Compliant

M	45	225	B	0	21	103	G
A	**B**	**C**	**D**	**E**	**F**	**G**	**H**

CATEGORY C – DIGIT 4-6: CUTTING OPTIONS

The cut length option is limited to lengths under 10" and can be up to two decimals places. The decimal place is assumed between the 4th and 5th digit.

CATEGORY E - DIGIT 8: THERMAL INTERFACE MATERIAL

Code	Description
0	None
1	Kon-Dux™ Pad - Thermal and Electrical conductive material
2	In-Sil-8™ Pad - Silicone based insulator material with thermally conductive fillers
3	Thermasil III - Silicone based insulator material with thermally conductive fillers

Max Clip Standard Part Numbering System

CATEGORY F - DIGITS 9-10: BOARD MOUNTING

Solderable Pins for Board Mounting

To order pins please include the quantity of pins needed in the 9th digit, up to 9 pins can be ordered. For standard parts pins are spaced 1” center to center or centered with the extrusion.

Code	Description
00	No Pin
01	Stand-off Pin 0mm
02	Stand-off Pin 1mm
03	Stand-off Pin 3mm
04	Stand-off Pin 5mm
05	Custom Pin

Example Part Numbers:

M45165B021023G – Part number uses base profile 78020 is 1.65” in length, is black anodized and includes the following: two, 0mm stand-off pins and two Max03NG clips.

M49525B332000G - Part number uses base profile 78265 is 5.25” in length, is black anodized and includes the following: Thermalsil III thermal interface material and three, 1mm stand-off pins.

CATEGORY G – DIGITS 11-13: DEVICE MOUNTING

Max Clips™ (Also Sold Separately)

To order clips please include the quantity of clips needed in the 11th and 12th digits. Please note that Dual Mounted need twice the amount of clips.

Code	Part #
000	None
001	Max01NG
002	Max02NG
003	Max03NG
004	Max04NG
005	Max09NG
006	Max10NG
007	Max11NG
008	Max12NG
009	Max13NG
00A	Max14NG
00B	Max15NG
00C	Max23NG
00D	Max01-HG
00E	Max02-HG
00F	Max03-HG

Max Clip Standard Part Numbering System

CLIP INDEX

Max Clips™ (Also Sold Separately)

Code	Part #	Short Clip	Long Clip	Normal Force 20N-40N	Normal Force 30N-50N	High Force 50N+	High Force 60N+	Special D61
001	Max01NG	-	-	TO-220, TO-218, TO-251, TO-262, TO-273	-	-	-	-
002	Max02NG	-	-	TO-220, TO-218, TO-251, TO-262, TO-273	-	-	-	-
003	Max03NG	-	-	-	TO-247, TO-274	-	-	-
004	Max04NG	-	-	-	-	-	-	TO-247, TO-274J
005	Max09NG	TO-220, TO-218, TO-251, TO-262, TO-273	-	-	-	-	-	-
006	Max10NG	-	TO-220, TO-218, TO-251, TO-262, TO-273	-	-	-	-	-
00D	Max01-HNG	-	-	-	-	TO-220, TO-218, TO-251, TO-262, TO-273	-	-
00E	Max02-HNG	-	-	-	-	-	TO-247, TO-274, TO-3P	-
00F	Max03-HNG	-	-	-	-	-	TO-247, TO-274, TO-3P	-

Max Clip Standard Part Numbering System

Max01	Width		Thickness		Force
	10 mm	x	0.5	=	22 N

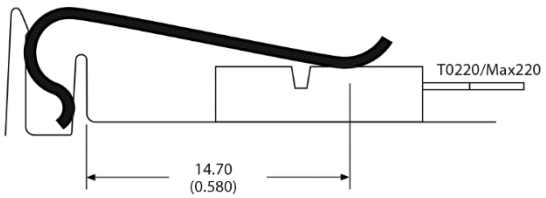

Max03	Width		Thickness		Force
	15 mm	x	0.5	=	45 N

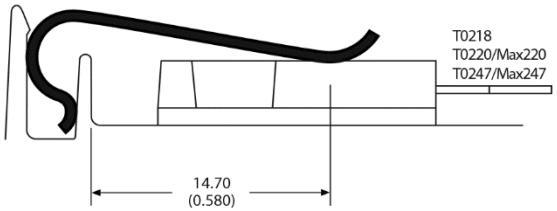

Max02	Width		Thickness		Force
	12 mm	x	0.5	=	35 N

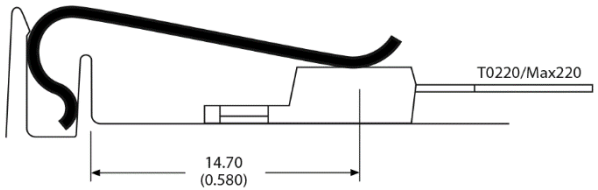

Max04	Width		Thickness		Force
	20 mm	x	0.5	=	60 N

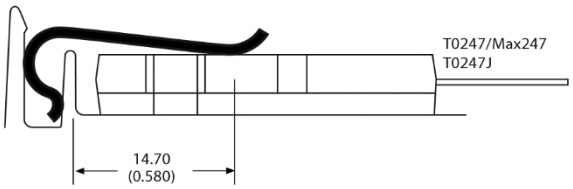

Max Clip Standard Part Numbering System

Max09	Width		Thickness		Force
	10 mm	x	0.5	=	45 N

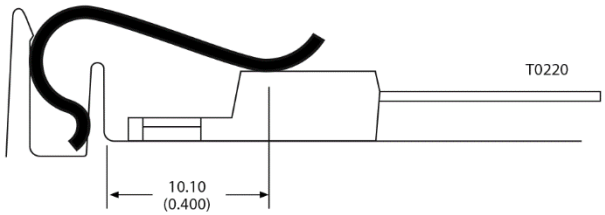

Max10	Width		Thickness		Force
	12 mm	x	0.6	=	40 N

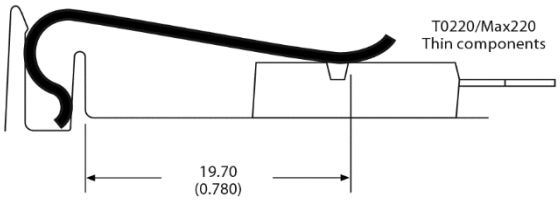

Max01-H	Width		Thickness		Force
	10 mm	x	0.7	=	80 N

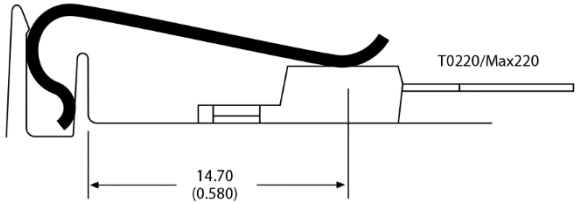

Max02-H	Width		Thickness		Force
	13 mm	x	0.6	=	60 N

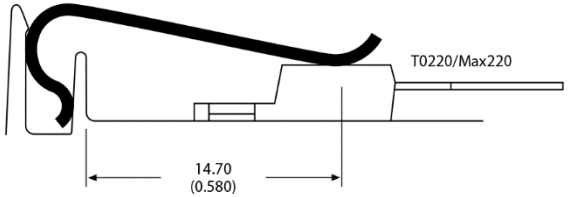
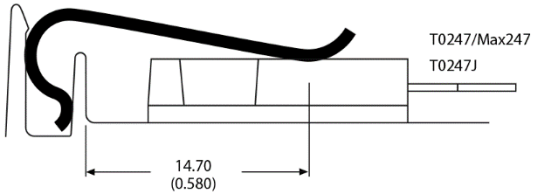
Max03-H	Width		Thickness		Force
	18 mm	x	0.6	=	80 N