# CLIFF

# SEALED ¼" MINI JACK MODEL S1K

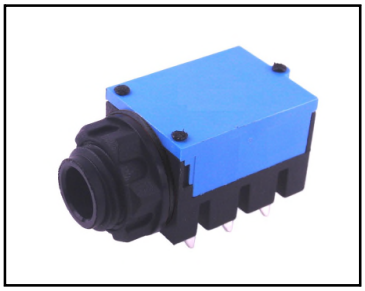

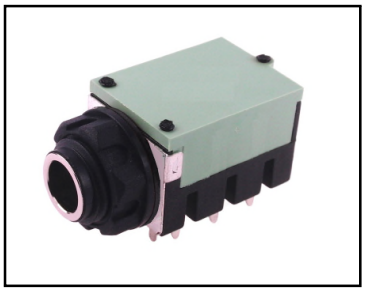

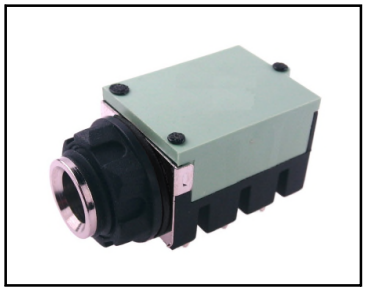

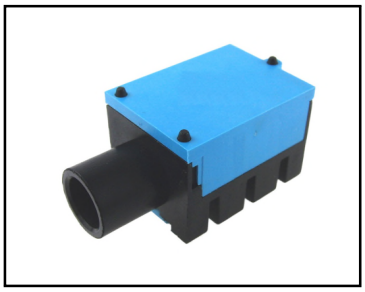

Many types of professional music equipment nowadays use high power components, and need to be cooled by fans. Fans draw in dust and pollutants which can adversely affect the contacts of conventional jacks, with exposed contacts.
S1K avoids possibility of contamination of contacts by means of a sealing cover over the top and bottom of the jack. The height profile and PCB fitting are the same as our standard S1 jacks.
S1K is available with switched mono /BNB or stereo /BBB configurations and types of front bush. Other contact configurations can be made subject to quantity. Plastic nut is standard.

## MODELS

**S1KA** Standard fully threaded for plastic or metal nut.
**S1KB** SPN - Partially reduced nose. Nuts not usually used, but are supplied.
**S1KC** Full thread with discrete bright insert and isolated RFI washer
**S1KD** Full thread with prominent bright insert. RFI washer connected to inserted jack plug.
**S1KE** Non thread bush. Nuts not used.
Retained hole plug forming a seal for front is available as an accessory.

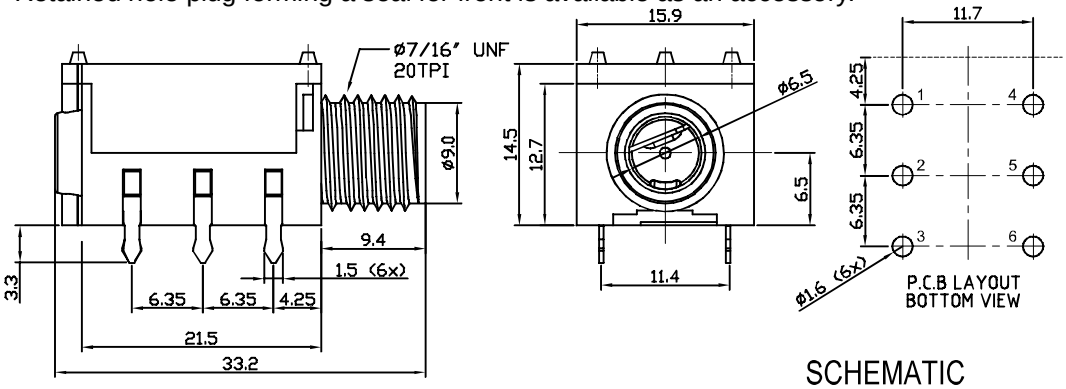


## PART Nos.

| | |
|---|---|
| FC67810 | S1KA/BBB/WNW SEALED JACK STD |
| FC67815 | S1KA/BNB/WNW SEALED JACK STD |
| FC67820 | S1KB/BBB/WNW/SPN SEALED JACK |
| FC67825 | S1KB/BNB/WNW/SPN SEALED JACK |
| FC67830 | S1KC/BBB/NI/WNW/IEW SEALED JACK |
| FC67835 | S1KC/BNB/NI/WNW/IEW SEALED JACK |
| FC67840 | S1KD/BBB/NI/WNW/CEW SEALED JACK |
| FC67845 | S1KD/BNB/NI/WNW/CEW SEALED JACK |
| FC67850 | S1KE/BBB/NNW SEALED JACK PLAIN |
| FC67855 | S1KE/BNB/NNW SEALED JACK PLAIN |
| FC67858 | S1K FRONT SEAL |

SCHEMATIC

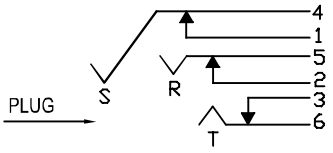


SWITCH CONTACTS OPEN WHEN PLUG IS INSERTED, CLOSE WHEN PLUG IS WITHDRAWN.

IEW = isolated earth washer
CEW = connected earth washer

## SPECIFICATION

| | |
|---|---|
| Withstand Voltage: | 2000VDC Min. |
| Maximum Current: | 5A. |
| Temperature Rating: | -10°C ~ +70°C |
| Life >10000 operations: | Contact resistance <100mΩ |
| Initial Contact Resistance: | <50mΩ |
| IP Rating (with plug in): | IP50 |

Black socket showing hole seal.

Order as: S1K[ ] / BNB - Mono / BBB - Stereo
Type

RoHS / REACH compliant
All models, except type E,supplied with plastic nut and washer
100 / Tray / 1000 / Carton

© CLIFF 11/15 ISS.3

For further information, contact sales@cliffuk.co.uk

**Cliff Electronic Components Limited**,
76 Holmethorpe Avenue, Holmethorpe Ind. Estate,
Redhill, Surrey RH1 2PF U.K.
Tel: +44 (0)1737 771375 Fax: +44 (0)1737 766012

Visit us online at:
www.cliffuk.co.uk