06LYH929

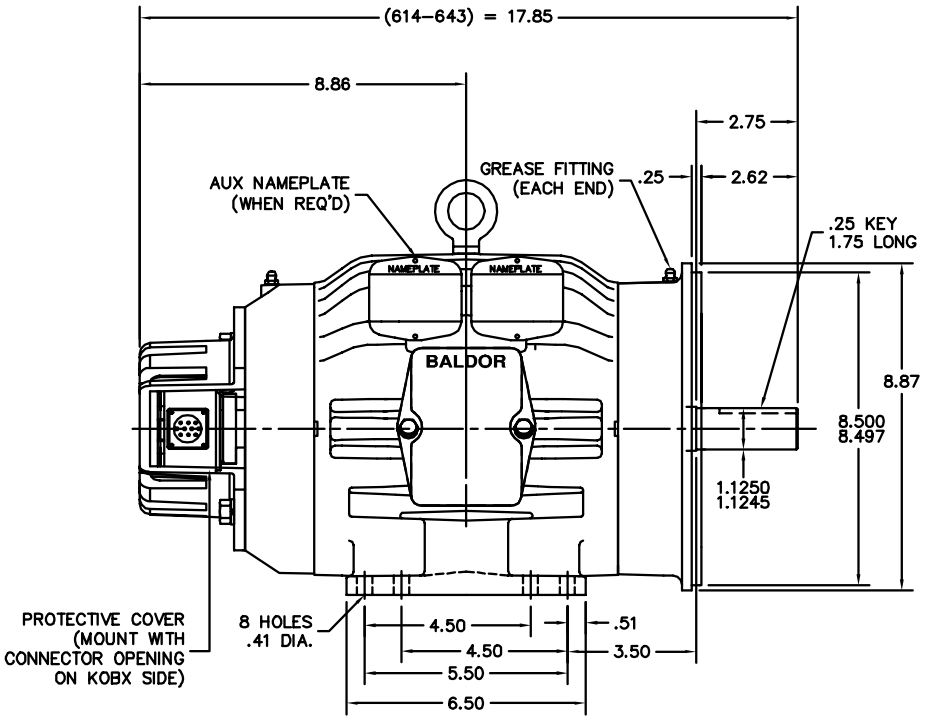

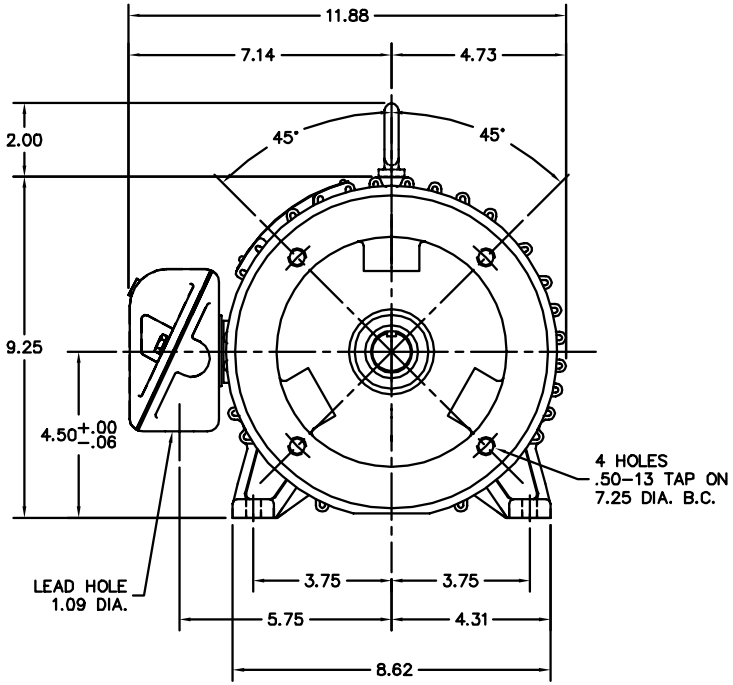

CUSTOMER IS RESPONSIBLE FOR DETERMINING THAT BALDOR'S PRODUCT WILL PERFORM SUITABLY IN THE INTENDED APPLICATION.

REV. DESC: ADD GRAPHICS FOR 2 AUX NAMEPLATE			BALDOR
REV. LTR: B	VERSION: 02	TDR: 000001028400	STD HORZ 182–4TC TENV V*S MASTER VECTOR W/ BEI HS35
FILE: \AAA\00193\782	REVISED: 02:16:17 05/15/2017	BY: USZAHAR	SH 1 of 1
MTL: –			

06LYH929