Product data sheet
Characteristics

TM5SBET1
remote transmitter module - communication between remote I/O

Product availability: Stock - Normally stocked in distribution facility

Main

Range of product	Modicon TM5
Product or component type	Remote transmitter module
Product specific application	Communication between remote I/O

Complementary

Range compatibility	Modicon M258 Modicon LMC058
Product compatibility	Logic controller Motion controller
Color	White
Bus length	8202.10 ft (2500 m)
Maximum cable distance between devices	328.08 ft (100 m)
Current consumption	25 mA 24 V DC input/output 100 mA 5 V DC bus
Maximum power dissipation in W	1.1 W
Local signalling	1 LED green power supply 1 LED red power supply 1 LED yellow communication data bus
Marking	CE
Net weight	0.06 lb(US) (0.025 kg)

Environment

Standards	UL 508 IEC 61131-2 CSA C22.2 No 213 CSA C22.2 No 142
Product certifications	CULus GOST-R CSA C-Tick
Ambient air temperature for operation	32…122 °F (0…50 °C) vertical installation) 32…131 °F (0…55 °C) without horizontal installation) 32…140 °F (0…60 °C) with derating factor horizontal installation)
Ambient air temperature for storage	-13…158 °F (-25…70 °C)
Relative humidity	5…95 % without condensation
IP degree of protection	IP20IEC 61131-2 IP67
Pollution degree	2 IEC 60664
Operating altitude	0...6561.68 ft (0...2000 m)
Storage altitude	0.00…9842.52 ft (0…3000 m)
Vibration resistance	1 gn 8.4…150 Hz DIN rail 3.5 mm 5…8.4 Hz DIN rail

The information provided in this documentation contains general descriptions and/or technical characteristics of the performance of the products contained herein.
This documentation is not intended as a substitute for and is not to be used for determining suitability or reliability of these products for specific user applications.
It is the duty of any such user or integrator to perform the appropriate and complete risk analysis, evaluation and testing of the products with respect to the relevant specific application or use thereof.
Neither Schneider Electric Industries SAS nor any of its affiliates or subsidiaries shall be responsible or liable for misuse of the information contained herein.

Shock resistance	15 gn 11 ms
Resistance to electrostatic discharge	4 KV on contact EN/IEC 61000-4-2 8 kV in air EN/IEC 61000-4-2
Resistance to electromagnetic fields	0.91 V/M (1 V/m) 2...2.7 GHz EN/IEC 61000-4-3 9.14 V/m (10 V/m) 80...2000 MHz EN/IEC 61000-4-3
Resistance to fast transients	1 KV EN/IEC 61000-4-4 I/O) 1 KV EN/IEC 61000-4-4 shielded cable) 2 kV EN/IEC 61000-4-4 power lines)
Surge withstand	0.5 KV differential mode EN/IEC 61000-4-5 1 kV common mode EN/IEC 61000-4-5
Electromagnetic compatibility	EN/IEC 61000-4-6
Disturbance radiated/conducted	CISPR 11

Ordering and shipping details

Category	22532 - M258 PLC
Discount Schedule	PC12
GTIN	00785901822844
Package weight(Lbs)	0.04 kg (0.08 lb(US))
Returnability	Yes
Country of origin	AT

Offer Sustainability

Sustainable offer status	Green Premium product
California proposition 65	WARNING: This product can expose you to chemicals including: Lead and lead compounds which is known to the State of California to cause Carcinogen & Reproductive harm. For more information go to www.p65warnings.ca.gov
REACh Regulation	REACh Declaration
REACh free of SVHC	Yes
EU RoHS Directive	Pro-active compliance (Product out of EU RoHS legal scope) EU RoHS Declaration
Toxic heavy metal free	Yes
Mercury free	Yes
RoHS exemption information	Yes
China RoHS Regulation	China RoHS Declaration
Environmental Disclosure	Product Environmental Profile
Circularity Profile	End Of Life Information
WEEE	The product must be disposed on European Union markets following specific waste collection and never end up in rubbish bins.

Contractual warranty

Warranty	18 months

TM5SBET1

TM5 Slice

Dimensions

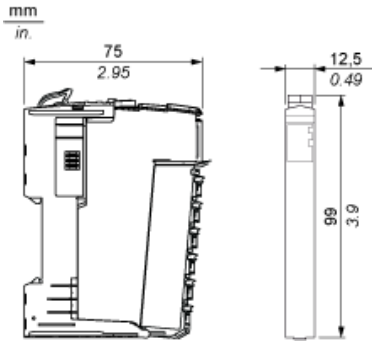

TM5 System

Spacing Requirements

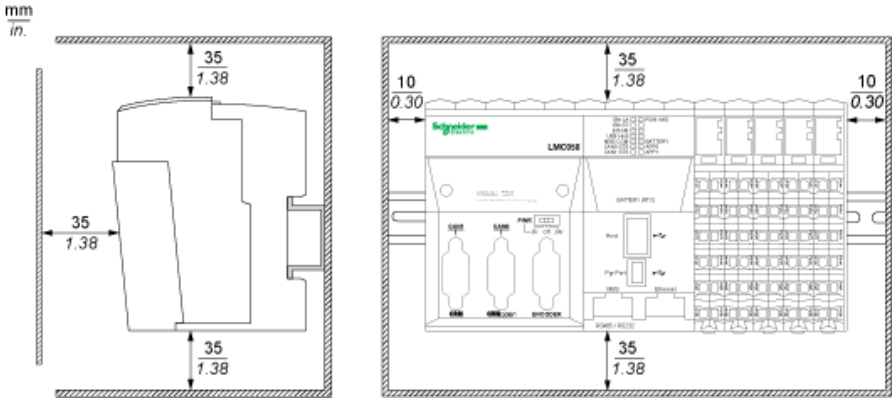

Mounting on a DIN Rail

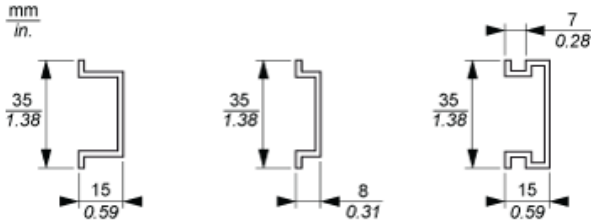

TM5 System Wiring Recommendations

Wire Sizes to Use with the Removable Spring Terminal Blocks

mm / in. 9 / 0.35				
mm²	0,08...2,5	0,25...2,5	0,25...1,5	2 x 0,25...2 x 0,75
AWG	28...14	24...14	24...16	2 x 24...2 x 18

Transmitter Electronic Module

Wiring Diagram

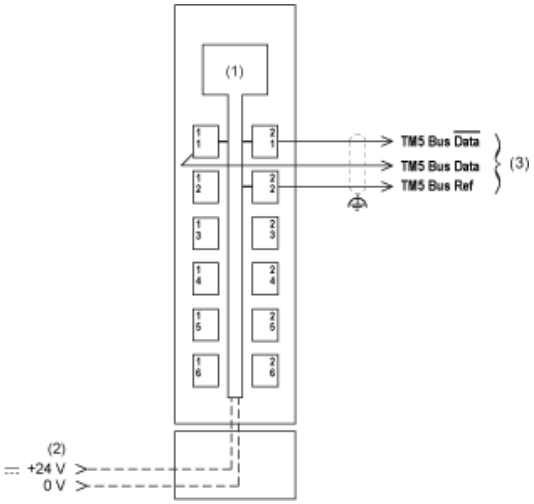

(1) Internal electronics
(2) 24 Vdc I/O power segment integrated into the bus bases
(3) TM5 expansion bus cable (TCSXCNNXNX100)