DWG. No. A 23728.71

RELAY SPECIFICATIONS

MATERIAL
- COVER: CLEAR POLYCARBONATE
- TERMIANL BOARD: MOLDED PPS THERMOPLASTIC
- CONTACTS: SILVER CADMIUM OXIDE (STATIONARIES & MOVABLES)

COIL AT 25° C
- RATING: 120 VAC
- PULL-IN: 75 VAC MAX.
- RESISTANCE: 1100 OHMS ±10%
- DUTY: CONTINUOUS
- TREATMENT: POLYESTER ENCAPSULATED
- INSULATION CLASS: F
- NOMINAL COIL POWER: 4.7 VA

CONTACTS
- ARRANGEMENT: DPDT (2 FORM C)
- RATING: 15 AMP OR 1/2 HP @ 120 VAC
- SIZE: 7/32" DIA.

MOUNTING
- TOP MOUNT COVER

DIELECTRIC STRENGTH
- 2200 VOLTS RMS
- 800 VOLTS RMS BETWEEN CONTACTS

MARKING
- DELTROL CONTROLS
- 267TM DPDT
- COIL 120 VAC S155D
- 1/2 HP 15 AMP 120 VAC
- 1 HP 15 AMP 277 VAC
- 15 AMP 28 VDC
- 23728-71
- MADE IN CHINA

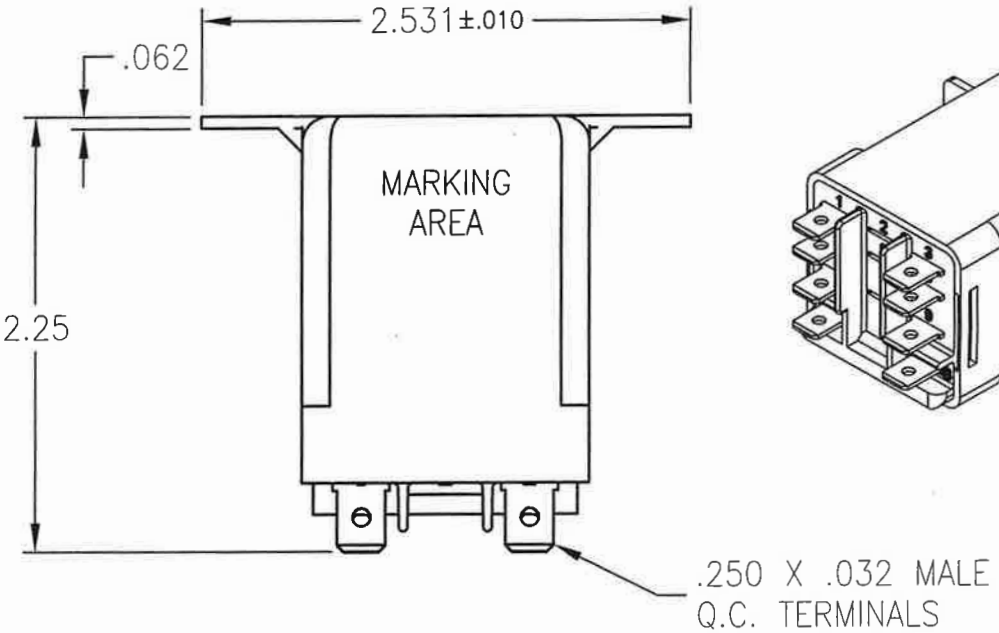

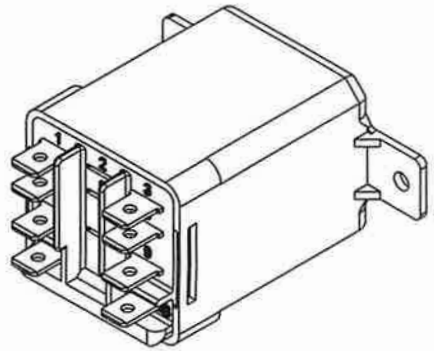

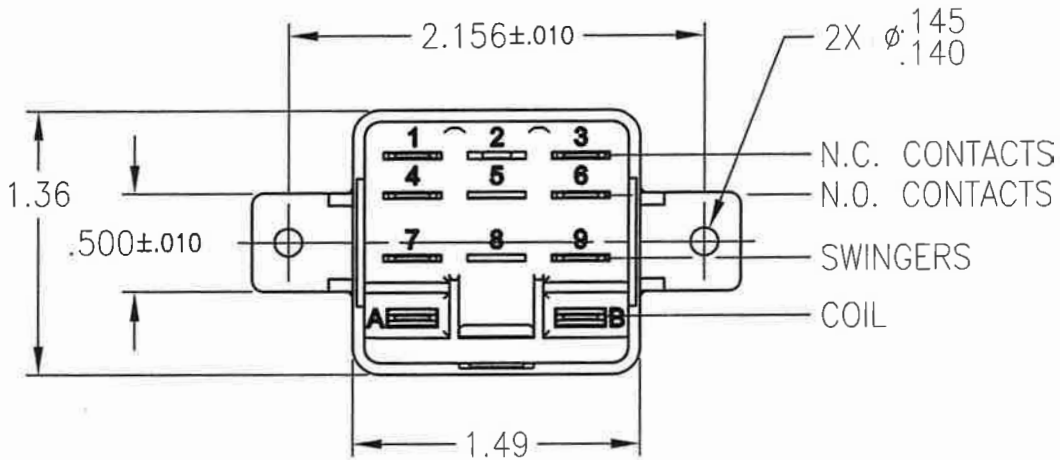

CUSTOMER: CAPTIVE-AIRE SYSTEMS/AQUAMATIC
CUSTOMER P/N: E7015

P97842

REV.	DESCRIPTION	DATE	BY
	RELEASED FOR PRODUCTION		

MATERIAL

FINISH

FIRST USED ON:

TOLERANCE (UNLESS SHOWN)
.XXX ±.005
.XX ±
DEG. ±
◇ CRITICAL
DIMENSION PER ANSI/ASME Y14.5M-1994

TOOL No.

SCALE 1:1
DATE 2-14-08
DR. BY JK
CKD. BY
APPR. BY

DELTROL controls
MILWAUKEE, WI. U.S.A.

NAME
267TM RELAY
CUSTOMER SPECIFICATION DRAWING

DWG. No. A 23728.71

REV.