M-7678 3

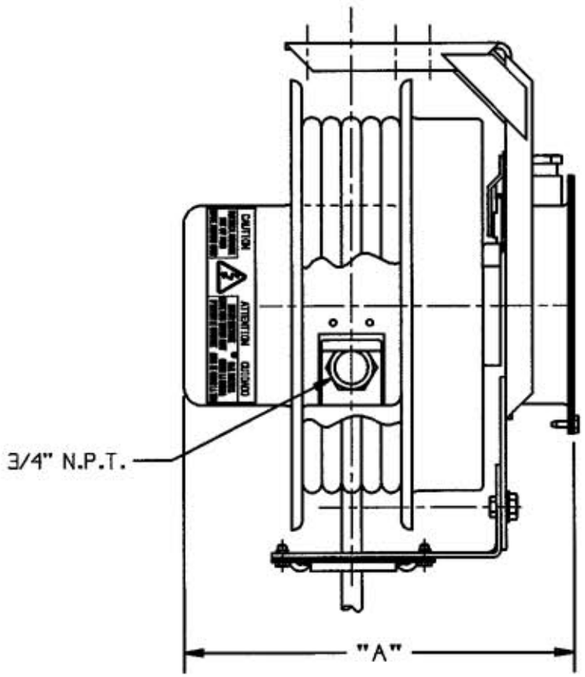

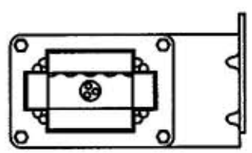

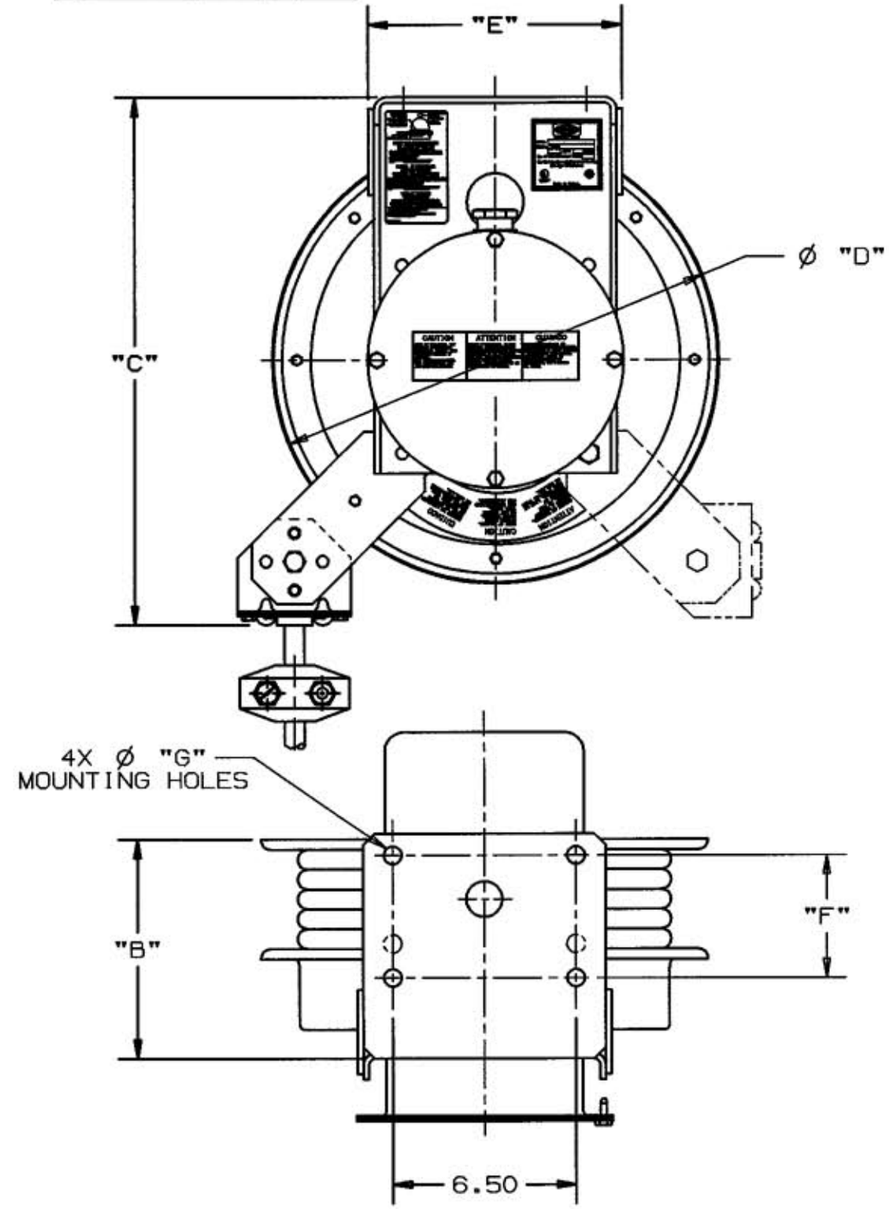

MANUFACTURED IN U.S.A.

CATALOG NUMBER	SHIPPING WEIGHT	REEL SIZE	CORD TYPE	CORD LGTH.	DIMENSIONS IN INCHES [mm]						
					A	B	C	D	E	F	G
HBL501431W	54 LBS.	14"	14/3 SOW-A	50 FT./15M	12.19	6.12	16.25	13.75	8.00	3.00	0.469
HBL501232W	80 LBS.	16"	12/3 SOW-A	50 FT./15M	14.19	8.00	18.25	15.75	8.50	4.94	0.531
HBL501242W	86 LBS.	16"	12/4 SOW-A	50 FT./15M	14.19	8.00	18.25	15.75	8.50	4.94	0.531
HBL501032W	86 LBS.	16"	10/3 SOW-A	50 FT./15M	14.19	8.00	18.25	15.75	8.50	4.94	0.531
HBL501042W	92 LBS.	16"	10/4 SOW-A	50 FT./15M	14.19	8.00	18.25	15.75	8.50	4.94	0.531

CODE 74545

LIST OF PARTS

DESCRIPTION	MATERIAL	FINISH
INTERNAL CIRCUITRY PARTS	COPPER ALLOY	
COLLECTOR COVER	STEEL	YELLOW
REEL BASE & SHEAVE	STEEL	YELLOW
CORD STOP	RUBBER	BLACK

SYM	REVISIONS	APP	DATE
3	12/4/01 ADDED METERIC EQUIVALENT FOR DIM. 6.50. ADDED CALLOUT FOR 3/4" N.P.T. ADDED "IN INCHES [mm] TO DIMENSIONS IN TABLE. PER DCN 8696 SPN	TCM	2/5/02
2	11-8-96 ROTATE CAUTION LABEL 0-56156-01 180°, ROTATED CABLE GUIDE 90° CLOCKWISE DCN 4653 SD		11/08/96
1	RELEASED PER DCN #4599 JMN	CJC	10/10/96

THE DESIGN AND DIMENSIONS OF THE PRODUCT SHOWN ON THIS DRAWING ARE SUBJECT TO CHANGE WITHOUT NOTICE

TITLE
WEATHERPROOF
CABLE REEL
TYPE 4X ENCLOSURE

TOLERANCES UNLESS OTHERWISE SPECIFIED
FRACTIONS ±1/64
DECIMALS ±.005
ANGLES ±2°

WIRING DEVICE DIVISION
HUBBELL, INCORPORATED
BRIDGEPORT, CT

DR. BY JMN	APP. BY CJC
TR. BY	SCALE NONE
CHK'D BY	DATE 10/09/96

DIMENSION SHEET FOR CAT. NO.
SEE TABLE

REPAIRABLE ☒
NON-REPAIRABLE ☐

B

M-7678

3