Carlon®

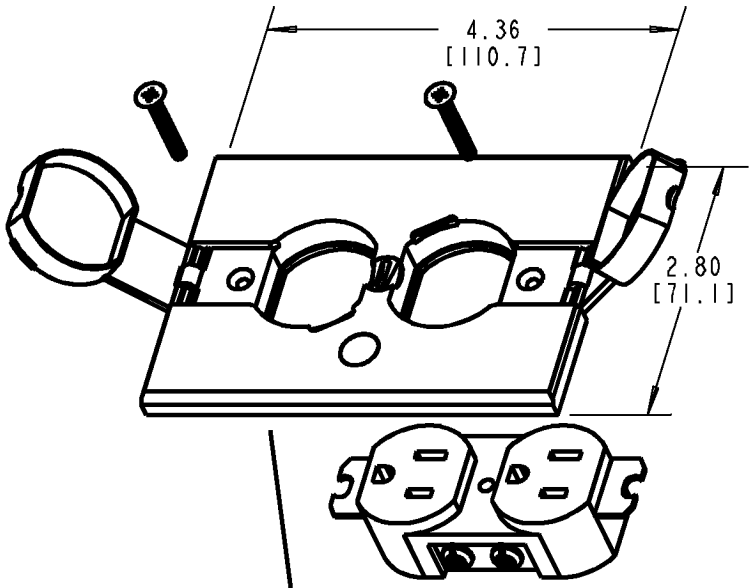

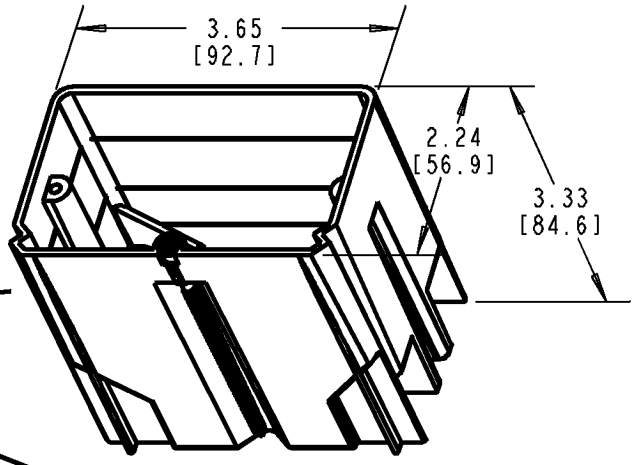

ADJUSTABLE FLOOR BOX KIT INCLUDES:

- UL LISTED FLOOR BOX COVER
- DUPLEX RECEPTACLE
- UL LISTED FLOOR BOX
- NEW WORK BRACKET
- OLD WORK BRACKET
- MOUNTING SCREWS
- INSTALLATION INSTRUCTIONS

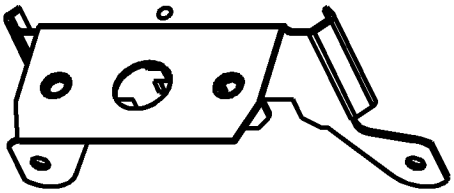

PART NO.	DESCRIPTION
BI21BFBR	ADJ. FLOOR BOX KIT - BEIGE
BI21BFBRR	ADJ. FLOOR BOX KIT - IVORY
BI21BFBRW	ADJ. FLOOR BOX KIT - WHITE

GENERAL NOTES

1. ALL DIMENSIONS ARE FOR REFERENCE ONLY.
2. DIMENSIONS IN BRACKETS [ ] ARE IN METRIC UNITS.

REVISIONS

** SEE ERN (****) FOR APPROVAL SIGNATURES & RELEASE DATE. PROJECT NO: ****

Thomas&Betts
www.tnb.com

DESCRIPTION: ADJUSTABLE FLOOR BOX KIT W/NON-METALLIC COVER

ORIGINAL PROJECT NO / (ERN NO)	SHEET NO:	REV. NO:	DRAWING NO:
/ ( )	1 OF 1	B	WSD-AC04239

THIS DRAWING IS INTENDED FOR DESCRIPTIVE PURPOSES ONLY. AND THE RIGHT IS RESERVED TO DEVIATE FROM ANY OF THE DETAILS SHOWN HEREON.
©2008 Thomas & Betts - Proprietary, All Rights Reserved