C.3: Validé

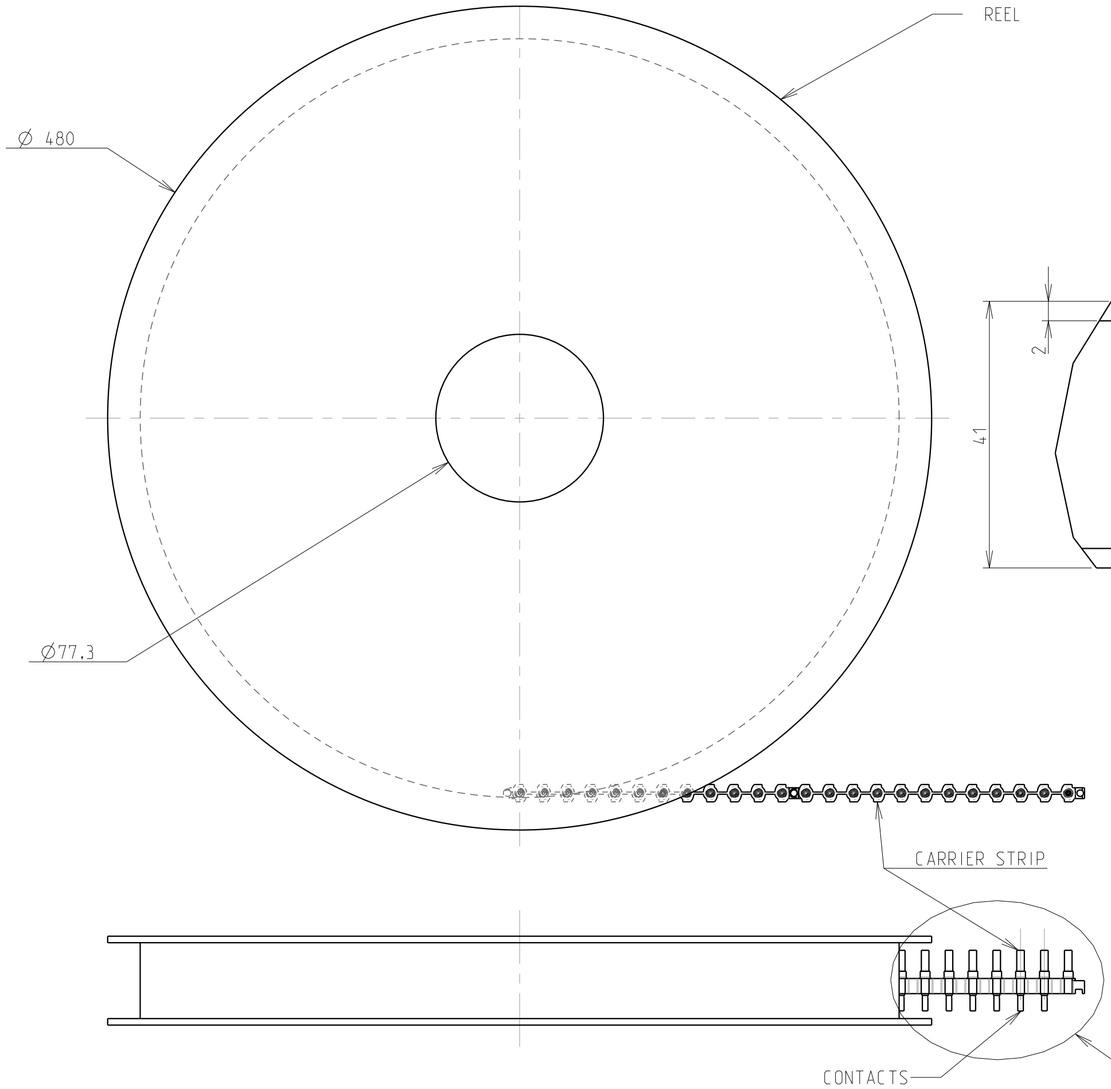

CHARACTERISTICS :

MATERIAL: - REEL : CARDBOARD
- CARRIER STRIP : WHITE PLASTIC

NUMBER OF CONTACTS ON REEL = 2000

DETAIL A
ECHELLE 3/2

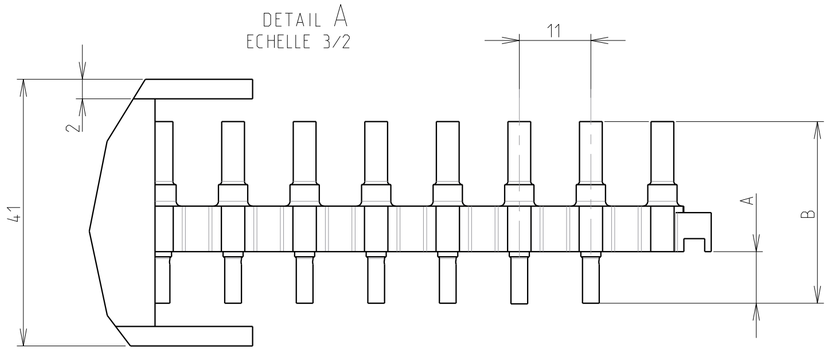

Part Number	Gender
KRC 16M23*	Female contacts
KRC 16M23GE1*	
KRC 20M12*	
KRC 20M12GE1*	
KRC 20M13*	
KRC 20M13GE1*	
KRC 24M9*	
KRC 24M9GE1*	
KRC 28M1*	
KRC 28M1GE1*	
KRC 16M25*	
KRC 14M30*	
KRC 14M30GE1*	
KRC 14M50*	
KRC 14M50GE1*	
KRM16M23*	Male contacts
KRM20M13*	
KRM20M12*	
KRM24M9*	
KRM28M1*	
KRM16M25*	
KRM16M26*	
KRM14M30*	
KRM14M50*	

Part Number	Gender	A	B
KRM--M--*	Male contacts	$8^{+0.5}_{-0}$	$27.95^{+0.55}_{-0}$
KRC--M--*	Female contacts	$8^{+0}_{-0.2}$	$27.75^{+0.30}_{-0}$
KRC--M--GE1*		$9.5^{+0}_{-0.2}$	$29.25^{+0.30}_{-0}$

* Plating :
J = Gold Flash over Nickel
K = 0.4 µ Gold over Nickel
N = 0.75 µ Gold over Nickel
L = 1.10 µ Gold over Nickel
M = 1.75 µ Gold over Nickel
T = 3 - 5 µ Tin over Nickel
D70 = Gold Flash over Nickel
D28 = 0.75 µ Gold over Nickel

DETAIL B
ECHELLE 2/1

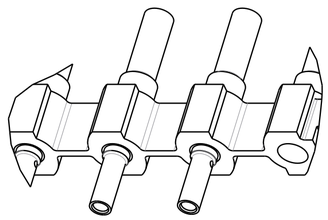

Country	Jurisdiction & Control list
FR	NOT LISTED

P/N : SEE TABLE

ISS	DATE	Latest modification - by:	LAURENT-N	MOD N°
C	27/01/2016	Addition of GE1 version for female contacts Update of A and B dimensions		24310

Designed by: ROUILLARD Date: 09/10/12 — CUSTOMER DRAWING

TITLE: CARRIER STRIP ON REEL FOR RM / RC CONTACTS
--

Scale 1/2 — General linear Tolerances: ± -- — NPRDS / PROJECT TRIM TRIO

SOURIAU — WWW.SOURIAU.COM

This document is the property of SOURIAU
It must not be reproduced or communicated without permission

FORMAT A2 — SOURIAU DRG N° KRM-KRC-C01 — SHEET 1 / 1