PRODUCT INFORMATION PACKET

Model No: 108092.00
Catalog No: 108092.00
1.50 HP SCR Motor, 1750 RPM, 180 V, 56C Frame, TEFC
SCR Motors

Regal and Leeson are trademarks of Regal Beloit Corporation or one of its affiliated companies.
©2020 Regal Beloit Corporation, All Rights Reserved. MC017097E

Nameplate Specifications

Output HP	**1.50 Hp**	Output KW	**1.1 kW**
Voltage	**180 V**	Current	**7.6 A**
Speed	**1750 rpm**	Service Factor	**1**
Efficiency	**86.5 %**	Duty	**Continuous**
Insulation Class	**H**	Frame	**S56C**
Enclosure	**Totally Enclosed Fan Cooled**	Thermal Protection	**No**
Ambient Temperature	**40 °C**	Drive End Bearing Size	**6203**
Opp Drive End Bearing Size	**6203**	UL	**Recognized**
CSA	**Y**	CE	**N**

Technical Specifications

Rotation	**Reversible**	Mounting	**Rigid C base**
Overall Length	**16.82 in**	Frame Length	**9.47 in**
Shaft Diameter	**0.625 in**	Shaft Extension	**2.06 in**
Outline Drawing	**031879-108092**	Connection Drawing	**00531901**

This is an uncontrolled document once printed or downloaded and is subject to change without notice. Date Created:30/12/2020

RBC PROPRIETARY AND CONFIDENTIAL INFORMATION
This document is the property of REGAL BELOIT CORPORATION ("RBC") including its subsidiaries and divisions and contains proprietary information of RBC. This document is loaned on the express condition that neither it nor the information contained therein shall be disclosed to others without the express written consent of RBC, and that the information shall be used by the recipient only as approved expressly by RBC. This document shall be returned to RBC upon its request. This document may be subject to certain restrictions under U.S. export control laws and regulations.

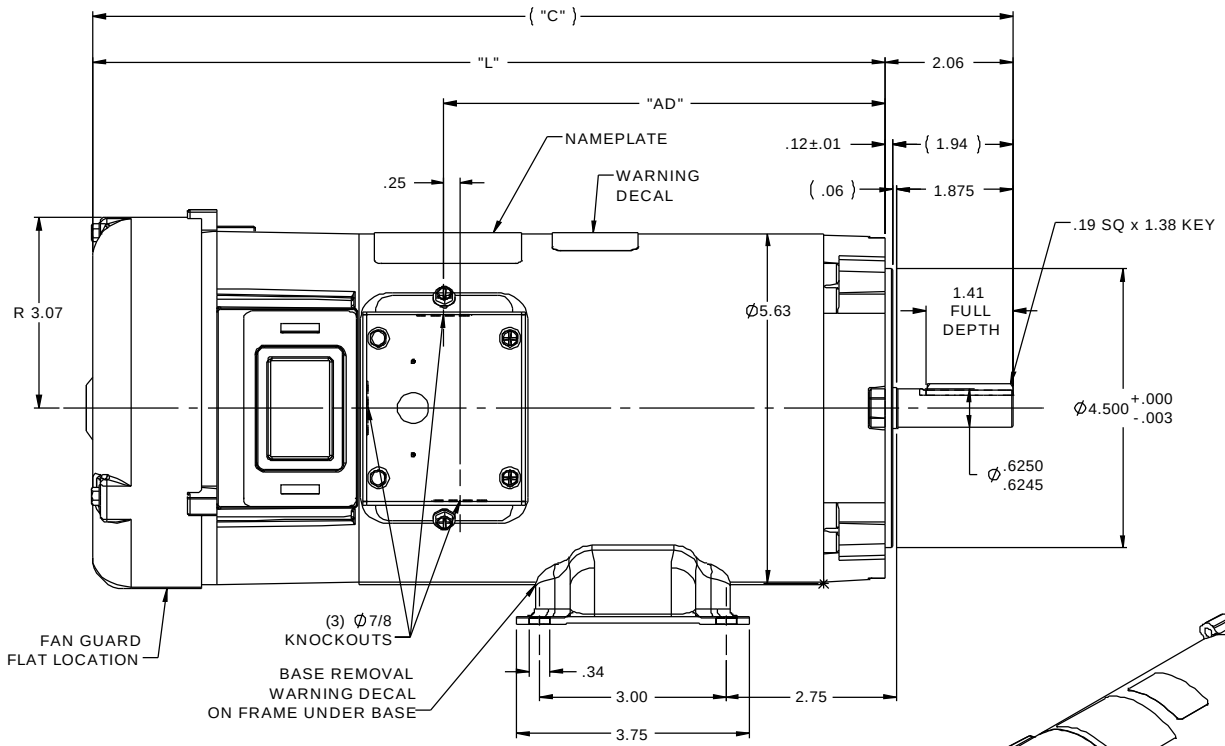

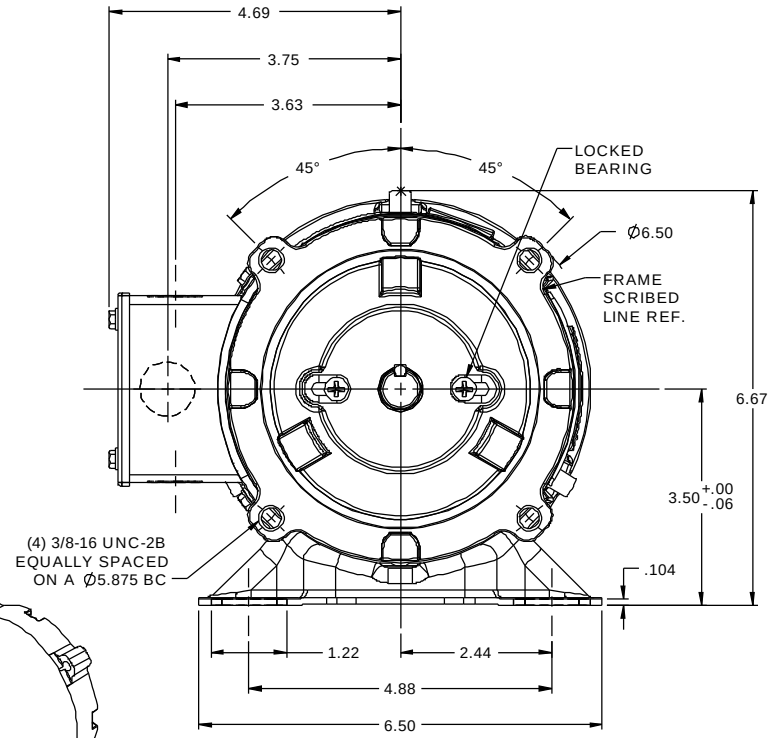

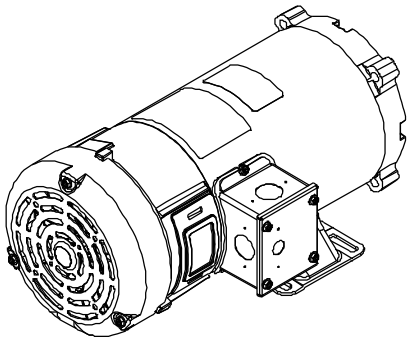

CATALOG No.	"C"	"L"	"AD"	VOLTS	H.P.	RPM
109100.00	15.82	13.76	8.10	90	3/4	1140
109099.00	14.32	12.26	6.60	90	1/2	1140
109098.00	12.82	10.76	5.10	90	1/3	1140
108265.00	15.32	13.26	7.60	180	1 1/2	2500
108092.00	16.82	14.76	9.10	180	1 1/2	1750
108023.00	14.82	12.76	7.10	180	1	1750
108022.00	14.82	12.76	7.10	90	1	1750
108021.00	13.82	11.76	6.10	180	1	2500
108020.00	13.32	11.26	5.60	90	1	2500
108019.00	13.82	11.76	6.10	180	3/4	1750
108018.00	13.82	11.76	6.10	90	3/4	1750
108017.00	12.82	10.76	5.10	180	3/4	2500
108016.00	12.82	10.76	5.10	90	3/4	2500
108015.00	12.82	10.76	5.10	180	1/2	1750
108014.00	12.82	10.76	5.10	90	1/2	1750

NOTES:
1) MAXIMUM FACE RUNOUT .004 T.I.R.
2) MAXIMUM PILOT ECCENTRICITY .004 T.I.R.
3) PERMISSIBLE SHAFT RUNOUT .002 T.I.R.
4) GASKETS THROUGHOUT

NO	REVISION	BY & DATE	CHK
06	CHANGED .06 & 1.94 DIMS TO REF., ISAAC 12-0984	IPG 1/30/2013	
05	ADDED NOTE ABOUT FAN GUARD LOCATION, ISAAC 09-4813	IPG 12/4/2009	
04	CAT. # 108092.00: "C" WAS 17.32, "L" WAS 15.26, "AD" WAS 9.60, ISAAC 09-1828	IPG 5/14/2009	
03	ADDED DATA FOR VARIOUS CAT. NUMBERS, COMPLETED TABLE	IPG 9/15/2008	

TOLERANCES UNLESS SPECIFIED

DEC	INCHES
.X	±.1
.XX	±.03
.XXX	±.005
.XXXX	±.0005
ANG	±1/2°

LEESON ELECTRIC MOTORS GEARMOTORS AND DRIVES

TITLE OUTLINE
48 FRAME DC - S56C MOUNT

MAT'L
FINISH
RFP
PREV
NETWORK FILE NAME 031879

THIRD ANGLE PROJECTION

DRAWN	RWS 1/8/08
CHK	IPG 1/9/08
APPR	
SCALE	1:2
REF	031189.00
FMF	108022.75
PAGE	OF
SIZE	B
DRAWING NO	031879
REV	06

1/30/2013 9:25:24 AM - Converted by Comrexus
You created this PDF from an application that is not licensed to print to novaPDF printer (http://www.novapdf.com)

Uncontrolled Copy

005319.01

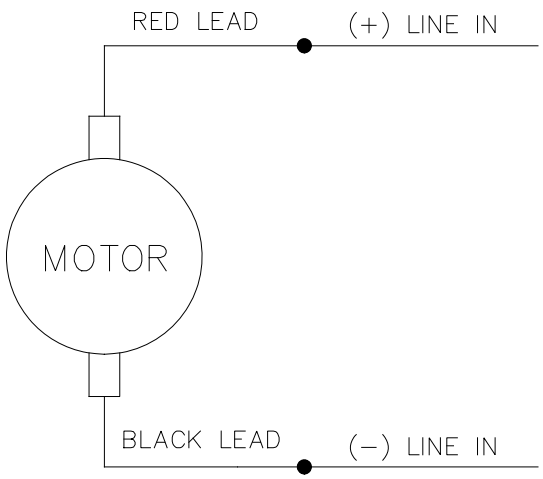

CONNECTIONS SHOWN FOR CCW ROTATION FACING LEAD END OF THE MOTOR

TO REVERSE ROTATION INTERCHANGE LINE LEADS

NO.	REVISION	BY & DATE	CHK
E	"MOTOR" WAS "ARMATURE", ECO−0163602	IPG 3/14/19	
D	UPDATED TO MAKE IT GENERIC, ECO−0163547	IPG 3/13/19	
01	REDRAWN ON CAD. REVISED NOTES.	SJB 9/20/2005	

TOLERANCES UNLESS SPECIFIED	
DEC.	INCHES
.X	±.1
.XX	±.01
.XXX	±.005
.XXXX	±.0005
ANG	±1/2°

LEESON ELECTRIC MOTORS GEARMOTORS AND DRIVES

TITLE EXTERNAL WIRING DIAGRAM PMDC MOTOR

MAT'L.

FINISH

CAD FILE 00531901

RFP

DIST

DRAWN	TJF 11/15/97
CHK	
APPD	POW 11/15/97
SCALE	1=2
REF	
FMF	
PREV	

SIZE A | DRAWING NO. 005319.01 | REV. E

THIS DRAWING IN DESIGN AND DETAIL IS OUR PROPERTY AND MUST NOT BE USED EXCEPT IN CONNECTION WITH OUR WORK ALL RIGHTS OF DESIGN AND INVENTION ARE RESERVED THIS IS AN ELECTRONICALLY GENERATED DOCUMENT – DO NOT SCALE THIS PRINT

Uncontrolled Copy

LEESON ELECTRIC CORPORATION

TYPICAL PERFORMANCE CURVE
FOR
DIRECT CURRENT PERMANENT MAGNET MOTOR

Model No. C4D17FK10 **Catalog No.** 108092.00

HP	1.500	**RPM**	1750	**DC Volts**	180.0	**N.P. FLA**	7.60
F.F.	1.38	**Encl**	TEFC	**Type**	DF	**S.F.**	1.00
Max. Amb.	40.0 Deg C	**Insul.**	H	**Frame**	S56C	**Duty**	Cont

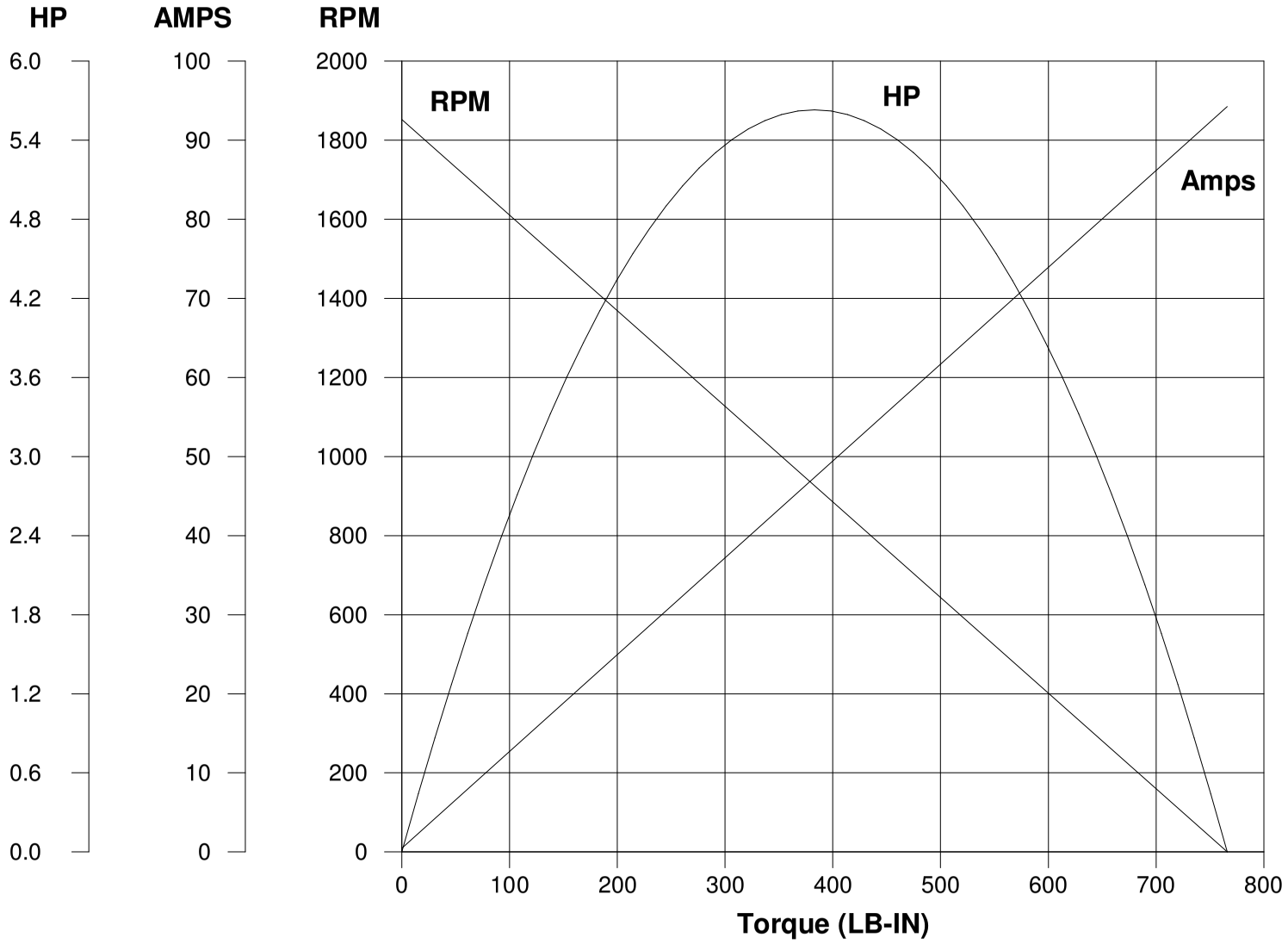

Ra	1.1000	Ohms	**Kt**	8.171	LB-IN/AMP
La	22.50	mHenrys	**Imax**	68.8	AMPS Allowed
Ja	20.80	LB-IN^2	**FL Torque**	54.00	LB-IN
Ke	96.67	V/KRPM	**FL EFF**	86.50	%

Winding W- D56275-1 **Prepared by** S. Bernhardt **Date** 09-09-2009

Brush H100