A.3: Validé

SIDE VIEW FOR EACH VERSION

UTGX6JC-----PSCR

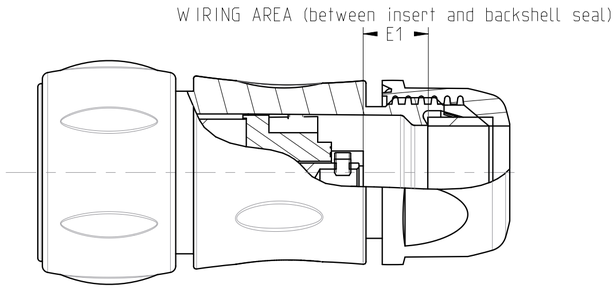

COUPE A-A

UTGX6JC-----SSCR

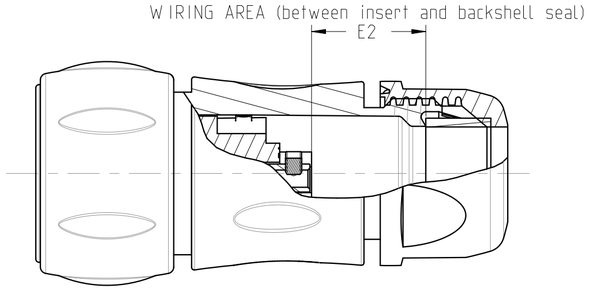

COUPE A-A

SEALING CONDITIONS

Sealing in MATED conditions with COUNTERPART:

-IP68 1 bar during 1 week: immersion under 10 m of water. (IEC 60529)
-IP69K : exposure to high pressure water of cleaning equipement (DIN 40050)

COMMON QUOTES FOR ALL VERSION

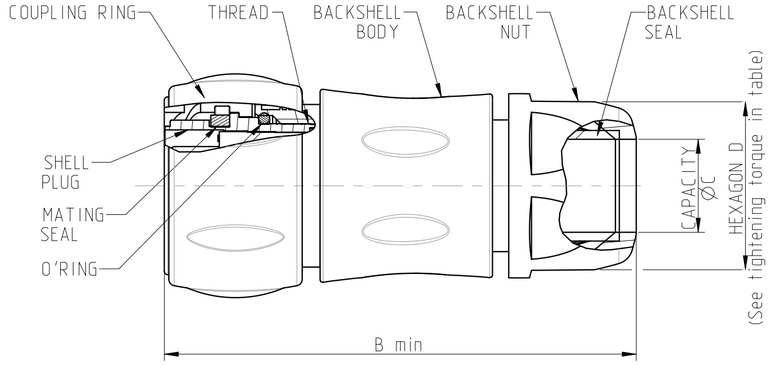

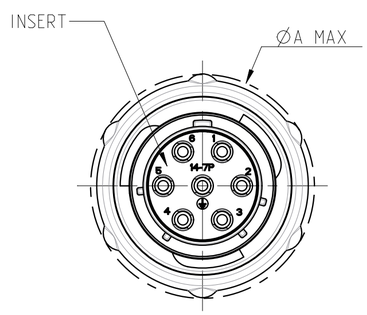

SHELL SIZE	MAX	min	STANDARD	REDUCING SEAL (NOTA.3)	HEXAGON backshell nut		MAX		±10% (g.)
	ØA	B	ØC		D	Tightening torque (N.m)	E1	E2	MASS
12	29.7	66.7	5 / 12	3 / 9	24	2	15.1	22.8	40
14	34.6	71.5	7 / 14	5 / 12	26	2.5	18.95	26.7	55

DETAIL CONTACT

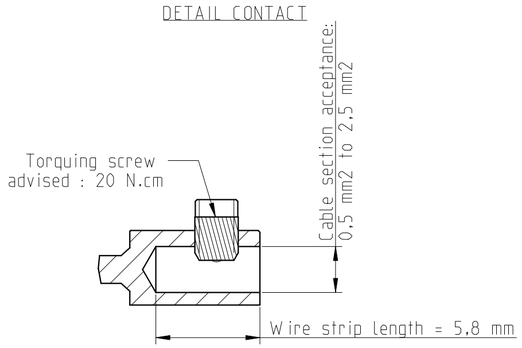

MATERIAL :

- SHELL : PA UL94 V0, UL746C F1 Black color
- COUPLING RING: PA + Nickel plated brass
- BACKSHELLS : PA UL94 V0 F1 Black color
- BACKSHELL Seal : CR
- INSERT : PA UL94 V0, UL746C F1
- O'RING : NITRIL
- MATING SEAL : SILICON
- CONTACT SPRING: copper alloy
- CONTACT BODY : brass, gold and nickel plated
- SCREW : stainless steel

PERFORMANCE CHARACTERISTICS

:
Operating temperature: -40°C up to 105°C
Insulation resistance: 5000 MΩmin
Corrosion salt spray: 500 hours
Durability: 500 matings and unmatings

Sealing conditions: SEE TABLE

NOTA:

1- Contact to be ordered separately for version UTGX0----- : refer to corresponding catalogue.
2- Insert arrangement refer to:
C008-UTS1-A(female insulator)
C007-UTS1-A (male insulator)
3- This part shall be used at the place of the standard seal to accomodate with different cable Ø
4- Plug, backshell and the reducing seal are delivered as a kit. The backshell already includes the standard seal.

Country	Jurisdiction & Control List
FR	NOT LISTED

SOURIAU shall not be liable for any non-conformity or damage due to a use of the Products which does not comply with the Specifications issued by either of the Parties or by a third party (professional recommendation, technical notice.)

P/N : CROSS REF TABLE

BASIC SERIES	UTGX	6	JC	14	7	P	SCR	*P/N for example
SHELL TYPE	6 Plug							
RACCORD	JC							
SHELL SIZE	12 14						SCREW TERMINATION	
INSERT ARRANGEMENT	See NOTA 2						TYPE OF CONTACTS	P: MALE S: FEMALE

ISS	DATE	Latest modification - by:	MOD N°
A	10/05/19	New drawing	25253D

Designed by: LANDAIS.PE Date: 10/05/19 — CUSTOMER DRAWING

TITLE: PLUG T6 WITH BACKSHELL JC AND SCREW CONTACT - SIZE 12 & 14
UTGX CONNECTOR

Scale 3/2 — Dimensions in mm General linear Tolerances: ± 0.2 — NPRDS / PROJECT GBB

SOURIAU Connection Technologies — www.esterline-connection-technologies.com

FORMAT A2 — SOURIAU DRG N° UTGX-0006A-C — SHEET 1 / 2

A.3; Validé

MASS ± 5%	-- g

P/N :

A			
ISS	DATE	Latest modification - by:	MOD N°
Designed by:		Date: 1	CUSTOMER DRAWING
TITLE	PLUG T6 WITH BACKSHELL JC AND SCREW CONTACT - SIZE 12 & 14		
Scale 3/2		Dimensions in mm General linear Tolerances: ± --	NPRDS / PROJECT GBB
SOURIAU Connection Technologies	www.souriau.com		This document is the property of SOURIAU It must not be reproduced or communicated without permission
FORMAT A2	SOURIAU DRG N° UTGX-0006A-C		SHEET 2 / 2

Country	Jurisdiction & Control List
FR	NOT LISTED