Electrostatic Sensor

IZD10/IZE11 Series

○ **Potential measurement: ±20 kV (detected at a 50 mm distance)**
±0.4 kV (detected at a 25 mm distance)

○ **Detects the electrostatic potential and outputs in an analog voltage.**

- Output voltage: 1 to 5 V (Output impedance: Approx. 100 Ω)

The importance of the static electric control is put on confirming the "actual status".

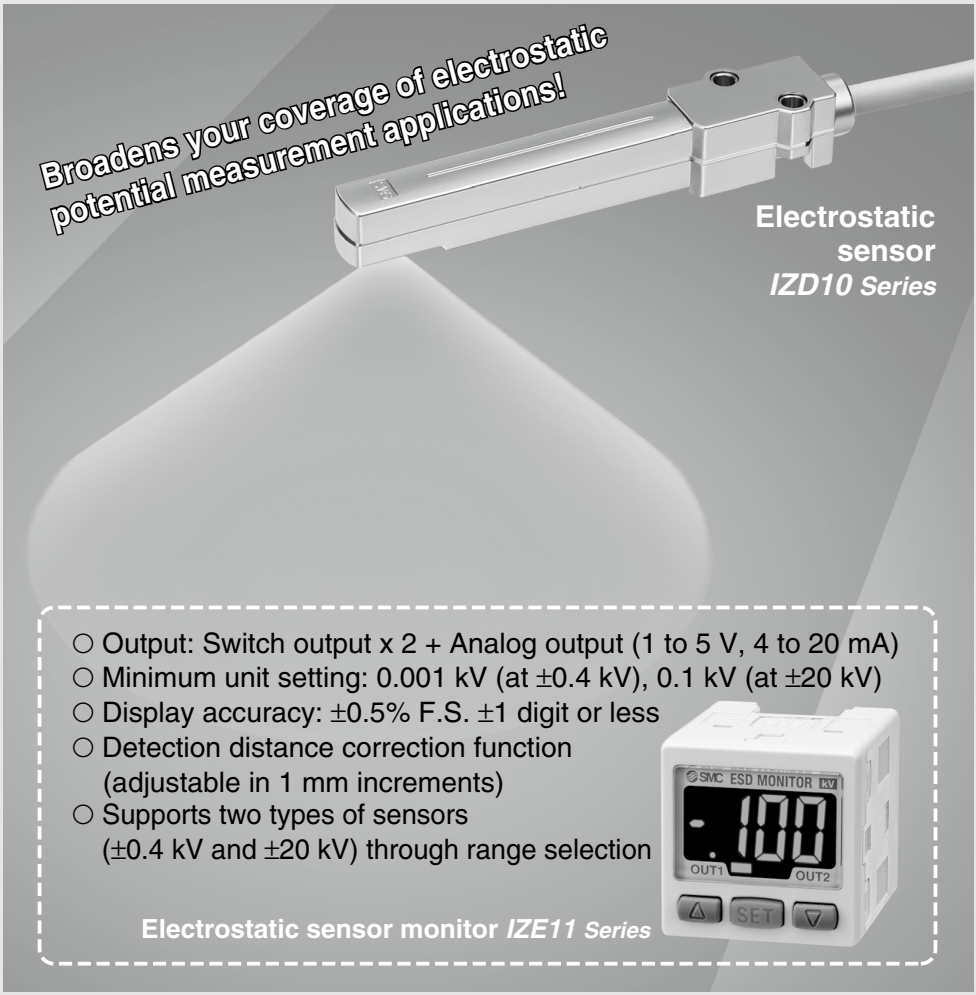

Electrostatic Sensor/IZD10 Series

Small and easy to mount

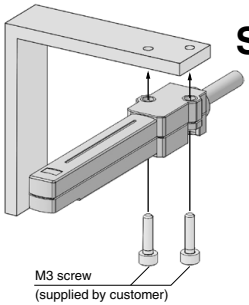

Dimensions

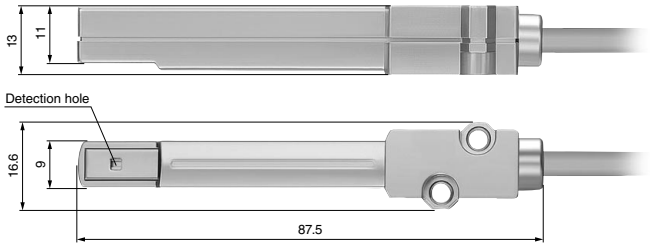

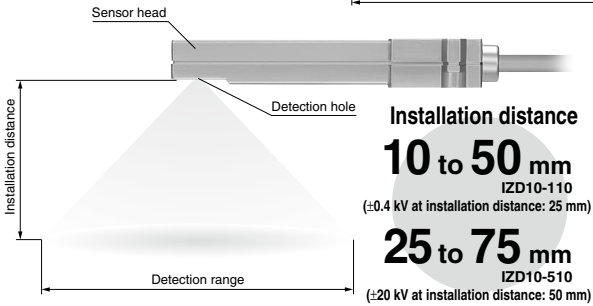

Installation distance

10 to 50 mm
IZD10-110
(±0.4 kV at installation distance: 25 mm)

25 to 75 mm
IZD10-510
(±20 kV at installation distance: 50 mm)

Installation Distance and Detection Range

IZD10-110

Installation distance (mm)	Detection range (mm)
10	45
20	85
25	100
30	120
40	150
50	180

IZD10-510

Installation distance (mm)	Detection range (mm)
25	100
30	120
40	150
50	180
60	205
70	225
75	235

Electrostatic Sensor Monitor/IZE11 Series

2-color display (Red/Green)

Able to set the display color in 4 patterns.

Pattern	ON	OFF
①	Red	Green
②	Green	Red
③	Red	Red
④	Green	Green

Mountable even with a sensor touched with each other

Possible to reduce panel fitting labor.

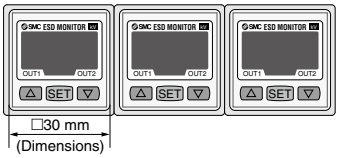

Connection by connector

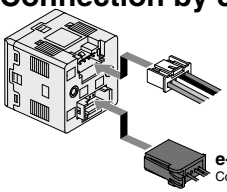

Functions

- Detection distance correction
- Peak/Bottom value indication
- Keylock
- Zero-adjust
- Error display
- Switch output anti-chattering
- Selection of connection sensor

Technical Data

Output Signal

When measuring the potential of a charged object with an electrostatic sensor, the relationship between the electrostatic potential being measured and the output voltage varies depending on the sensor's installation distance. The relationship in the installation distance between the electrostatic sensor's output voltage and the detected electrostatic potential is as shown in the figure below: (The installation distance in the figure refers to the distance between the object being measured and the electrostatic sensor.)

Relationship in installation distance between electrostatic potential and sensor output voltage

IZD10-110

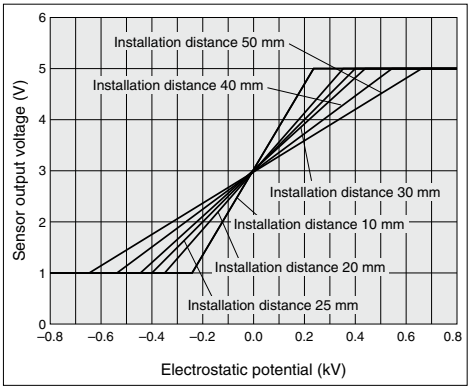

IZD10-510

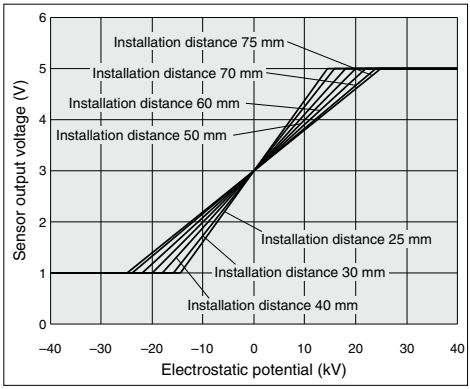

Detection Range

The relationship between the electrostatic sensor's installation distance and the detection range is as follows:

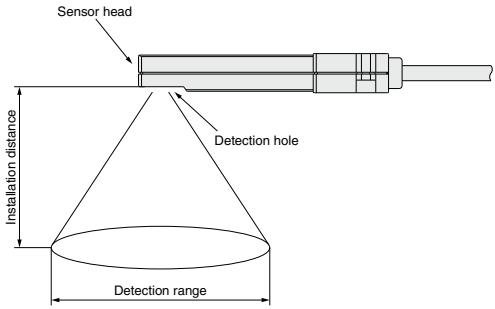

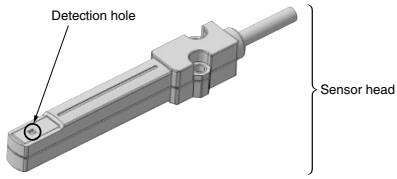

IZD10-110
(Potential measurement: ±0.4 kV)

Installation distance (mm)	Detection range (mm)
10	45
20	85
25	100
30	120
40	150
50	180

IZD10-510
(Potential measurement: ±20 kV)

Installation distance (mm)	Detection range (mm)
25	100
30	120
40	150
50	180
60	205
70	225
75	235

Electrostatic Sensor
IZD10 Series

How to Order

IZD 10 — 1 10

Model

10	Electrostatic sensor

Potential measurement

1	±0.4 kV
5	±20 kV

Specifications

Model	IZD10-110	IZD10-510
Potential measurement	±0.4 kV (at detection distance: 25 mm)Note)	±20 kV (at detection distance: 50 mm)Note)
Output voltage	1 to 5 V (Output impedance: Approx. 100 Ω)	
Effective detection distance	10 to 50 mm	25 to 75 mm
Linearity	±5% F.S. (0 to 50°C, at detection distance: 25 mm)	±5% F.S. (0 to 50°C, at detection distance: 50 mm)
Output delay time	100 ms or less	
Power supply voltage	21.6 to 26.4 VDC (Within 24 VDC ±10%)	
Current consumption	40 mA or less	
Operating ambient temperature	0 to 50°C	
Operating ambient humidity	35 to 85% Rh (with no condensation)	
Material	Head case : ABS Amplifier case : ABS	
Vibration resistance	Durability 50 Hz Amplitude 1 mm X, Y, Z each 2 hours	
Shock resistance	100 m/s^2	
Weight	185 g (including cable weight)	
Compliance with EN standards	Protective class : Class III (EN60950-1) Pollution Degree 3 CE marking : Low voltage directive : 2006/95/EC Only when connected to a SELV-type external circuit.	
EMC directive	2004/108/EC	
UL standards	UL508	

Note) The relationship between the measured potential and the output voltage varies depending on the detection distance.
For details on the relationship in the detection distance between the measured potential and the output voltage, refer to the graph in "Technical Data - Output Signal" on page 503.

Connection Circuit and Wiring Table

Connect the lead wires according to the following connection circuit and wiring table.

1. Connection circuit

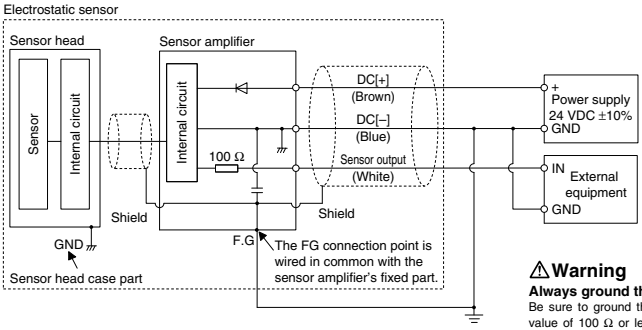

2. Wiring table

Lead wire color	Description	Function
Brown	DC (+)	Power supply 24 VDC
Blue	DC (–)	Power supply 0 V
White	Sensor output	Analog output 1 to 5 V

⚠Warning

Always ground the electrostatic sensor.

Be sure to ground the GND terminal with a resistance value of 100 Ω or less. In addition, a dedicated power supply is recommended for use as the sensor-driving power supply. Connecting any equipment other than the sensor to this power supply may trigger the malfunctioning or breakdown of the equipment when static electricity is discharged to the sensor head or when noise enters the GND terminal.

Note) When using the cable on the external equipment connection side after cutting it short, do not connect a shielding wire (since the shielded line is wired in common with the amplifier case, provide a frame ground on the amplifier case side).

∗ Text in ( ) refers to each lead wire coating color of the dedicated cable.

Dimensions

IZD10-110
IZD10-510

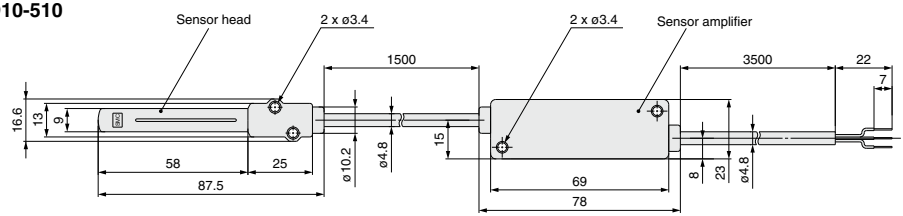

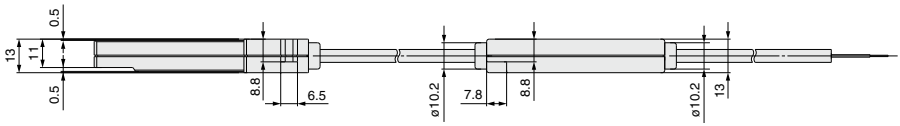

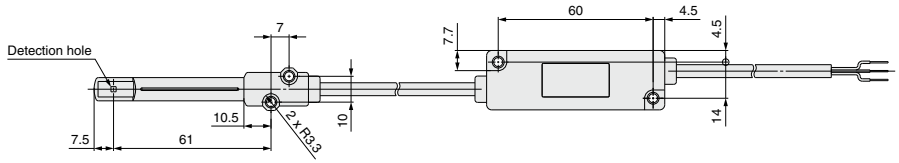

Electrostatic Sensor Monitor
IZE11 Series

How to Order

IZE11 0 □ □ □

Input/Output specifications

0	NPN open collector 2 outputs + Analog output 1-5 V
1	NPN open collector 2 outputs + Analog output 4-20 mA
2	PNP open collector 2 outputs + Analog output 1-5 V
3	PNP open collector 2 outputs + Analog output 4-20 mA

Option 1

Nil	None
L	Connector cable for power supply/output 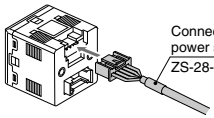

Note) The cable is not connected but packed together with product for shipment.

Option 2

Nil	None
A	Bracket 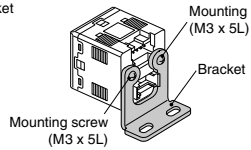
B	Panel mount adapter 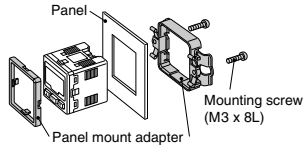
D	Panel mount adapter + Front protective cover 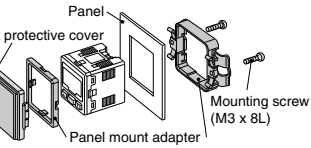

Note) The options are not attached but packed together with product for shipment.

Option 3

Nil	None
C	With connector for sensor connection 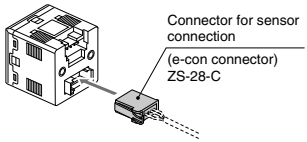

Note) The connector is not connected but packed together with product for shipment.

Options/Part No.

Description	Part no.	Note
Connector cable for power supply / output (2 m)	ZS-28-A	
Bracket	ZS-28-B	With M3 x 5L (2 pcs.)
Connector for sensor connection	ZS-28-C	1 pc.
Panel mount adapter	ZS-27-C	With M3 x 8L (2 pcs.)
Panel mount adapter + Front protective cover	ZS-27-D	With M3 x 8L (2 pcs.)

Specifications

Model		IZE11□	
Connection sensor		IZD10-110	IZD10-510
Rated measurement range		–0.4 kV to +0.4 kV Note 1)	–20 kV to +20 kV Note 2)
Min. unit setting		0.001 kV	0.1 kV
Measurement distance setting		10 to 50 mm	25 to 75 mm
Power supply voltage		21.6 to 26.4 VDC (24 VDC ±10% or less, with power supply polarity protection)	
Current consumption		50 mA or less (excluding sensor unit's current consumption)	
Sensor input		1 to 5 VDC (Input impedance: 1 MΩ)	
	Number of inputs	1 input	
	Input protection	With excess voltage protection (up to 26.4 V)	
	Hysteresis	Hysteresis mode: Variable Window comparator mode: Variable	
Switch output		NPN or PNP open collector: 2 outputs	
	Max. load current	80 mA	
	Max. applied voltage	30 VDC (with NPN output)	
	Residual voltage	1 V or less (with load current of 80 mA)	
	Short circuit protection	With short circuit protection	
	Response time (including sensor response time)	100 ms or less Response time with anti-chattering function: 500 ms, 1 s, 2 s or less	
Analog output	**Voltage output**	Output voltage: 1 to 5 V (with rated pressure range), Output impedance: Approx. 1 kΩ	
	Accuracy (for readings) (25°C)	±1% F.S.	
	Current output	Output current: 4 to 20 mA (with rated pressure range) Max. load impedance: 600 Ω (at 24 VDC), Min. load impedance: 50 Ω	
	Accuracy (for readings) (25°C)	±1% F.S.	
	Response time (including sensor response time)	200 ms (without filter), 1.5 s (with filter) or less	
Display acurracy		±0.5% F.S. ±1 digit	
Display		3 + 1/2 digit, 7-segment indicator, 2-color display (Red/Green) Sampling cycle: 5 times/s	
Indicator light		OUT1: Lights up when output is turned ON (Green), OUT2: Lights up when output is turned ON (Red).	
Environment	**Enclosure**	IP40	
	Operating temperature range	Operating: 0 to 50°C, Stored: –10 to 60°C (with no freezing or condensation)	
	Operating humidity range	Operating/Stored: 35 to 85% RH (with no condensation)	
	Withstand voltage	1000 VAC for 1 minute between terminals and housing	
	Insulation resistance	50 MΩ or more (500 VDC measured via megohmmeter) between terminals and housing	
	Vibration resistance	10 to 150 Hz at whichever is smaller of 1.5 mm amplitude or 98 m/s^2 acceleration, in X, Y, Z direction for 2 hrs. each (De-energized)	
	Impact resistance	100 m/s^2 in X, Y, Z directions 3 times each (De-energized)	
Temperature characteristics		±0.5% F.S. (25°C reference)	
Connection method		Power supply, Output connection: 5-pin connector, Sensor connection: 4-pin connector	
Material		Front case: PBT, Rear case: PBT	
Weight (excluding power supply/output connection cable)		30 g	
Standards		CE marking, UL (CSA) compliant	

Note 1) Rated value when the distance between the charged object and the sensor is 25 mm
Note 2) Rated value when the distance between the charged object and the sensor is 50 mm

Example of Internal Circuit and Wiring

Output specifications

The wire colors (brown, black, white, gray and blue) shown in the circuit diagram apply when SMC's power supply and output connection cable (Part no.: ZS-28-A) are used.

IZE110

NPN open collector output: 2 outputs
Max. 30 V, 80 mA
Residual voltage 1 V or less
Analog output: 1 to 5 V
Output impedance: Approx. 1 kΩ

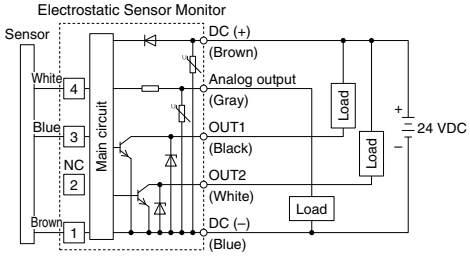

IZE112

PNP open collector output: 2 outputs
Max. 80 mA
Residual voltage 1 V or less
Analog output: 1 to 5 V
Output impedance: Approx. 1 kΩ

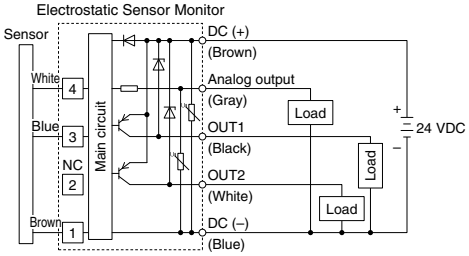

IZE111

NPN open collector output: 2 outputs
Max. 30 V, 80 mA
Residual voltage 1 V or less
Analog output: 4 to 20 mA
Max. load impedance: 600 Ω (24 VDC)
Min. load impedance: 50 Ω

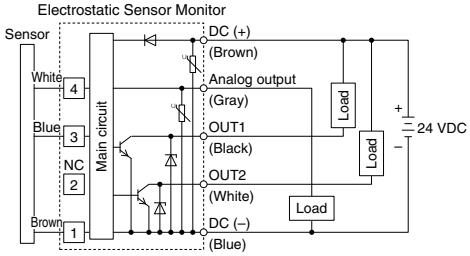

IZE113

PNP open collector output: 2 outputs
Max. 80 mA
Residual voltage 1 V or less
Analog output: 4 to 20 mA
Max. load impedance: 600 Ω (24 VDC)
Min. load impedance: 50 Ω

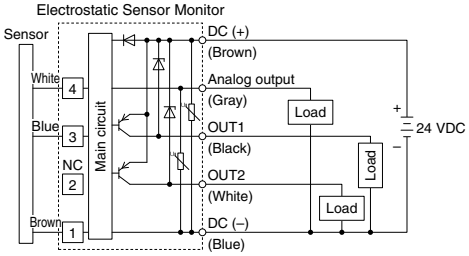

Description

LCD display

Shows the current electrostatic potential, set mode, and error code. Four display methods are available for selection, including an option for always displaying in a single color, red or green, and an option for switching from green to red in conjunction with the output.

Output (OUT1) display (Green)

Turns on when the OUT1 output is on.

▲ button

Use this button to change the mode or increase the ON/OFF set value. It also allows you to switch to the peak value display mode.

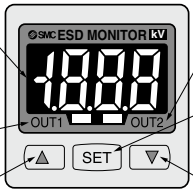

Output (OUT2) display (Red)

Turns on when the OUT2 output is on.

SET button

Use this button to switch the mode and set the set value.

▼ button

Use this button to change the mode or decrease the ON/OFF set value. It also allows you to switch to the bottom value display mode.

Dimensions

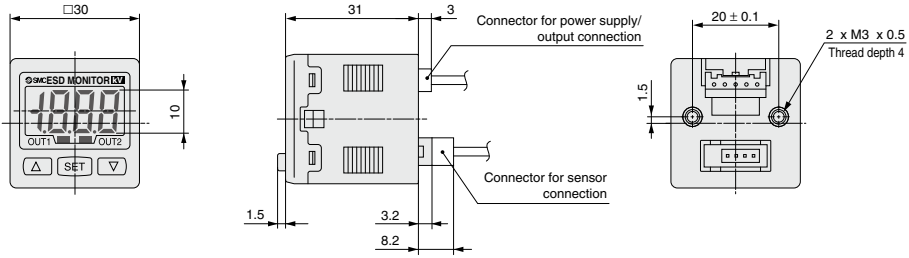

Connection cable for power supply/output (ZS-28-A)

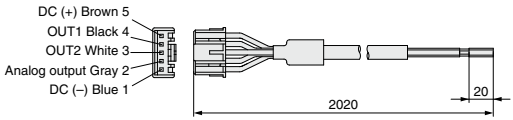

Connector for sensor connection

Pin no.	Terminal name
1	DC (+)
2	N.C.
3	DC (–)
4	IN (1 to 5 V)

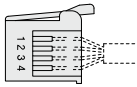

With bracket

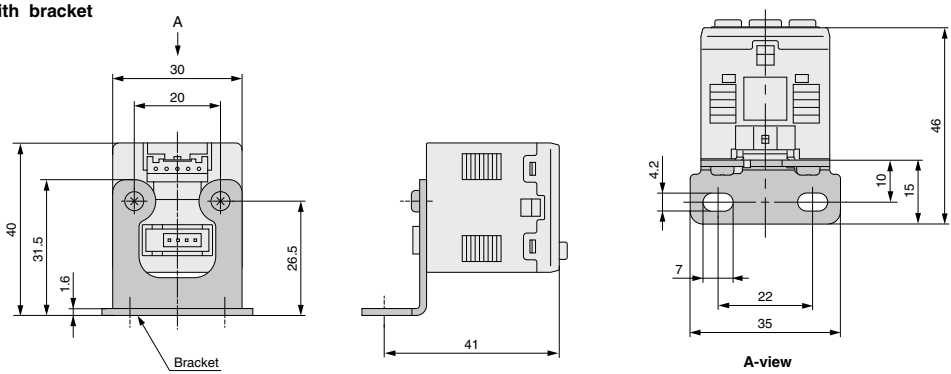

With panel mount adapter

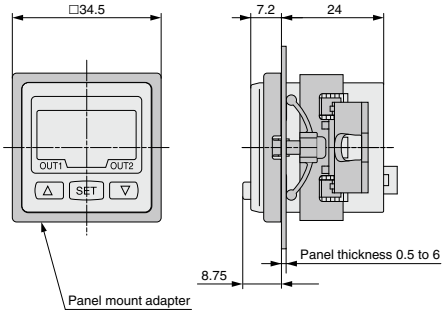

With panel mount adapter + Front protective cover

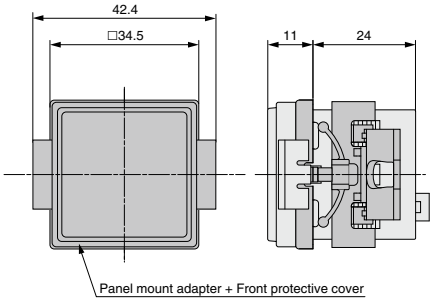

Dimensions

Panel fitting dimensions

∗ Panel thickness: 0.5 to 6 mm

More than 1 pc. (n pcs.) horizontal mounting

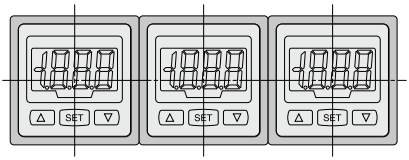

Individual mounting

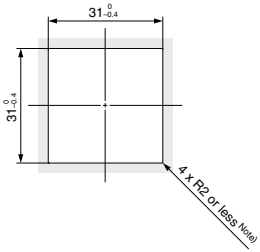

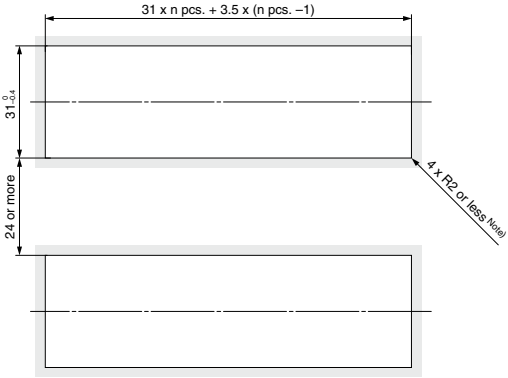

More than 1 pc. (n pcs.) vertical mounting

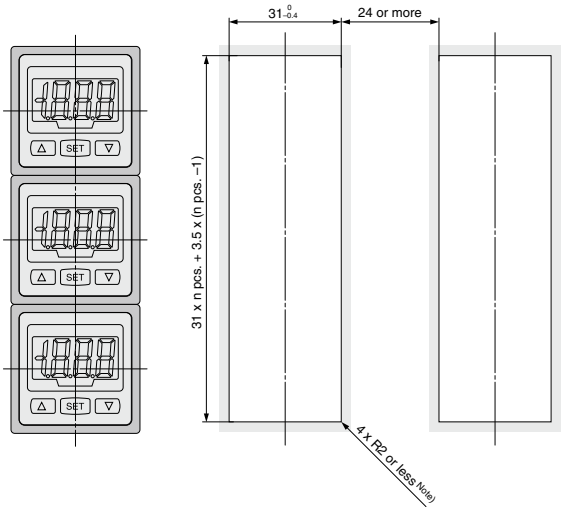

Note) When providing a curvature radius (R), keep it to R2 or smaller.

Function Details

A Detection range correction function

By previously inputting a distance from the sensor to the object being measured, it is possible to reduce errors due to variations in the measurement distance.

B Peak/Bottom value indication

This function constantly detects and updates the maximum and minimum pressure values and allows to hold the display value.

C Keylock function

This function prevents incorrect operations such as changing the set value accidentally.

D Zero-adjust function

The reading of the measured voltage can be adjusted to zero. The reading can be corrected within ±10% of F.S. from the factory-set condition.

E Error display function

Error description		Error display	Condition
Over-current error	OUT1	Er 1	Load current of switch output is more than 80 mA.
	OUT2	Er2	
System error		Er3	Internal data error
Zero-adjust error		Er4	During zero adjustment, an amount of static electricity beyond ±10% of F.S. has been given to the sensor. * After displaying the error code for approximately one second, the sensor automatically returns to measurement mode. The zero point may slightly fluctuate depending on the individual product difference and the sensor's mounting condition during zero adjustment.
Over-flow Under-flow		HHH	The displayable range has been exceeded because an amount of static electricity beyond the upper limit of the voltage measurement range has been given to the sensor or the measurement distance setting and/or the sensor mounting position is inappropriate, or for other reasons.
		LLL	The sensor may not have been wired yet or may have mistakenly wired. Alternatively, the displayable range has been exceeded because an amount of static electricity beyond the upper limit of the voltage measurement range has been given to the sensor or the measurement distance setting and/or the sensor mounting position is inappropriate, or for other reasons.

F Anti-chattering function

The charged voltage may vary temporarily. This function prevents such a momentary change from being detected as an abnormal voltage by changing the response time setting.
Response time: 100 ms, 500 ms, 1 s, 2 s or less
(Principal)
When a measured value is retained for an optionally set time length (delay time), the sensor compares the measured value with the setpoint to provide a switched output.

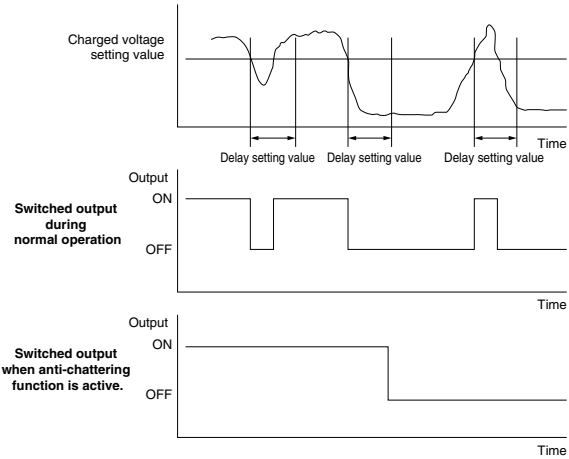

G Connection sensor selection function

The type (range) of electrostatic sensor to be connected can be selected. The monitor is factory-set to the ±0.4 kV option.

IZD10 Series
Electrostatic Sensors Precautions 1

Be sure to read this before handling the products.
Refer to back page 50 for Safety Instructions and pages 514 and 515 for Specific Product Precautions.

Selection

⚠Warning

1. **This product is intended to be used with general factory automation (FA) equipment.**
   If considering using the product for other applications (especially those stipulated in 4 on back page 50), consult with SMC beforehand.
2. **Use this product within the specified voltage and temperature range.**
   Using outside of the specified voltage can cause a malfunction, damage, electrical shock, or fire.
3. **This product is not explosion-protected.**
   Never use this product in environment, where dust explosion may occur or flammable or explosive gases are used. This can cause fire.

⚠Caution

1. **This product is not cleaned. Before bringing this product into a clean room, remove particles using the clean dry air blow, etc. Before using the product, confirm that its cleanliness satisfies the required level.**
2. **Do not blow the clean dry air to the detection hole. Otherwise, the detection mechanism may be deformed. This may cause not only incorrect detection of the charged electric potential, but also sensor failure.**

Mounting

⚠Warning

1. **Reserve an enough space for maintenance, piping and wiring.**
   Please take into consideration that the port location for external equipment, need enough space for the cable to be easily attached/detached.
   To avoid excessive stress on the port location for external equipment, cable entry for sensor head and mounting base of cable entry for amplifier, please take into consideration the cables minimum bending radius and avoid bending at acute angles.
   Wiring with excessive twisting, bending, etc. can cause a malfunction, wire breakage, fire or air leakage.
   Minimum bending radius: Sensor cable ..... 25 mm
   (Note: Shown above is wiring with the fixed minimum allowable bending radius and at a temperature of 20°C. If used under this temperature, the port location for external equipment, cable entry for sensor head and mounting base of cable entry for amplifier can receive excessive stress even though the minimum bending radius is allowable.)
2. **Mounting on a plane surface.**
   If there are irregularities, cracks or height differences, excessive stress will be applied to the frame or case, resulting in damage or other trouble. Also, do not drop or apply a strong shock. Otherwise, damage or an accident can occur.
3. **Do not drop or bump the sensor.**
   When handling the sensor, do not drop the sensor or apply strong impact to it, as this may cause the sensor to malfunction or break down.
4. **Do not use this product in an area where noise (electric magnetic field or surge voltage, etc.) are generated.**
   Using the ionizer under such conditions may cause it to malfunction or internal devices to deteriorate or break down. Take noise countermeasures and prevent the lines from mixing or coming into contact with each other.

Mounting

⚠Warning

5. **Observe the tightening torque requirements when installing the ionizer. (Refer to the operation manual included with the product.)**
   If overtightened with a high torque, the mounting screws or mounting brackets may break. Also, if under tightened with a low torque, the connection may loosen.
6. **Do not directly touch the detection surface of the sensor head with a metal piece or hand tool.**
   Touching the surface in this manner may not only cause the sensor to not only fail to provide the specified functionality and/or performance but also result in a sensor failure or an accident.
7. **Do not affix any tape or seals to the main unit.**
   If the tape or seal contains any conductive adhesive or reflective paint, a dielectric phenomenon may occur due to ions arising from such substances, resulting in electrostatic charging or electric leakage.
8. **Installation and adjustment should be conducted after turning off the power supply.**
9. **Keep the installation distance long enough to prevent static electricity from being discharged through the sensor head (refer to Technical Data on page 503 and Specifications on page 504).**
   Static electricity may be discharged through the sensor head depending on the electrostatic potential of the object. Be extremely careful about this since electrostatic discharge through the sensor head may cause the sensor to break down.

⚠Caution

1. **Install the electrostatic sensor away from walls, etc., as shown below:**
   The ionizer may fail to measure electrostatic potentials correctly if a wall or other obstacles exist within the clearances shown in the following figure.

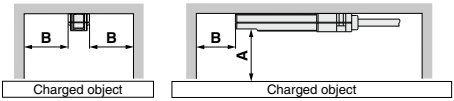

(mm)

A	B
10	20
20	40
25	45
30	55
40	65
50	75
60	90
70	100
75	105

2. **After installation, always make sure that the electrostatic potential is measured correctly.**
   Errors may occur in the detected electrostatic potential depending on the ambient installation conditions, etc. After installation, check the sensor's condition with regard to electrostatic potential detection.

IZD10 Series
Electrostatic Sensors Precautions 2

Be sure to read this before handling the products.
Refer to back page 50 for Safety Instructions and pages 514 and 515 for Specific Product Precautions.

Wiring/Piping

⚠Warning

1. **Before wiring confirm if the power supply voltage is enough and that it is within the specifications before wiring.**
2. **To maintain the product performance, ground the FG terminal with a resistance value of 100 Ω or less while referring to the instructions stated in this document.**
   When using a commercially available switching regulator, ground the GND and FG terminals.
3. **When applying the power supply, pay special attention to the wiring and/or surrounding environment until the safety is confirmed.**
4. **Do not remove or attach wires from/to any parts, including the power supply, while the sensor is turned on, as this may cause the surface electrostatic sensor to malfunction. Be sure to the sensor is turned off prior to performing any wiring (including plugging/unplugging connectors).**
5. **If the power line and high pressure line are routed together, this product may malfunction due to noise. Therefore, use a separate wiring route for this product.**
6. **Be sure to confirm there are no wiring errors before starting this product.**
   Faulty wiring will lead to product damage or malfunction.
   Applying 24 VDC to the sensor output will directly lead to internal circuitry breakdown.

Operating Environment/Storage Environment

⚠Warning

1. **Operate at an ambient temperature that is within the specifications.**
   Ambient temperature ranges from 0 to 50°C. Do not use the sensor in locations where the temperature may change suddenly even if the ambient temperature range is within the specified limits, resulting in condensation.
2. **Environments to avoid**
   Avoid using and storing this product in the following environments since they may cause damage to this product.
   a) Avoid using in a place that exceeds an ambient temperature range of 0 to 50°C.
   b) Avoid using in a place that exceeds an ambient humidity range of 35 to 85% Rh.
   c) Avoid using in a place where condensation occurs due to a drastic temperature change.
   d) Avoid using in a place in the presence of corrosive or explosive gas or where there is a volatile combustible.
   e) Avoid using in an atmosphere where there are particles, conductive iron powders, oil mist, salt, solvent, blown dust, cutting oil (water, liquid), etc.
   f) Avoid using in direct sunlight or radiated heat.
   g) Avoid using in a place where there is a strong magnetic noise (strong electric field, strong magnetic field, or surge).
   h) Avoid using in a place where the main body is electro-statically discharged.
   i) Avoid using in a place where a strong high frequency occurs.
   j) Avoid using in a place where this product is likely to be damaged by lightning.
   k) Avoid using in a place where direct vibration or shock is applied to the main body.
   l) Avoid using in a place where there is a force large enough to deform this product or weight is applied to the product.

Operating Environment/Storage Environment

⚠Warning

3. **The electrostatic sensor is not resistant to lightning surges.**
   Take measures for protection against lightning surges on the system side.

Maintenance

⚠Caution

1. **Periodically inspect the electrostatic sensor to check if it is operated while being out of order.**
   Only a person having an adequate knowledge and experience about the system is allowed to inspect the sensor.
2. **Do not disassemble or rebuild this product.**
   Otherwise, an electrical shock, damage and/or a fire may occur. Also, the disassembled or rebuilt products may not achieve the performances guaranteed in the specifications, and excercise caution because the product will not be warrantied.

Handling

⚠Warning

1. **Do not drop, bump or apply excessive impact (100 m/s² or more) while handling.**
   Even though it does not appear to be damaged, the internal parts may be damaged and cause a malfunction.
2. **Do not operate this product with wet hands. Otherwise, an electrical shock or accident may occur.**
3. **Before use, allow the sensor to warm up for 10 minutes or more after power-on.**
   The sensor may provide unsteady readings immediately after power-on.
4. **Use a UL-approved DC power supply compatible with the UL1310 Class 2 Power Unit or with power units comprising a UL1585 Class 2-compliant transformer, in combination with the sensor.**

IZD10 Series
Specific Product Precautions 1

Be sure to read this before handling the products.
Refer to back page 50 for Safety Instructions and pages 512 and 513 for Electrostatic Sensors Precautions.

Mounting of Electrostatic Sensor

Mounting of Sensor Head

1. **When using the electrostatic sensor, install it in a location where the detection hole of the sensor head can detect the object being measured. (Refer to "Technical Data – Detection Range" on page 503.)**
2. **Install the sensor so that the distance between the detection hole and the object's surface is within 10 to 50 mm when the IZD10-110 is used and within 25 to 75 mm when the IZD10-510 is used. Be careful not to allow the sensor head to come into contact with the object. Static electricity may be discharged through the sensor head depending on the electrostatic potential of the object. Keep the installation distance long enough to prevent static electricity from being discharged through the sensor head. Be very careful about this since electrostatic discharge through the sensor head may cause the sensor to break down.**
   The detection range and the sensor output vary depending on the installation distance. For more information, refer to "Technical Data - Output Signal and - Detection Range" on page 503.
3. **Use two M3-size screws (should be prepared separately) to mount the sensor head.**
   Recommended tightening torque for M3 screws: 0.61 to 0.63 N·m

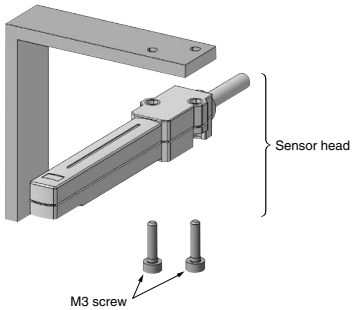

4. **Align bolts with their seating surfaces to mount the sensor head. Mounting it by inserting the bolts from the opposite side may damage the sensor head.**
   The sensor head enclosure is in common with the GND terminal for reasons of the sensor structure. When installing or turning on the sensor, be very careful to avoid the enclosure from being short-circuited to the +24 V power supply. The detection hole is opened in order to detect static electricity. If any foreign matters enter the hole or the inner part of the hole is touched with a hand tool, etc., the sensor may malfunction or break down, resulting in a failure to correctly detect static electricity. Be careful not to allow any foreign matters to enter the inner part or touch it with a hand tool, etc. Do not pull the cable extending from the sensor head or twist it at the head's neck. Forcibly pulling or twisting the cable in this manner may cause the sensor head and/or the cable to break down.

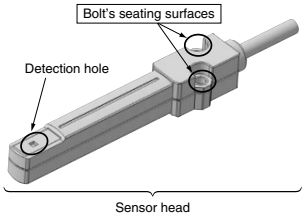

Mounting of Sensor Amplifier

1. **Use two M3-size screws (should be prepared separately) to mount the sensor amplifier.**
   Recommended tightening torque for M3 screws: 0.61 to 0.63 N·m
2. **Align bolts with their seating surfaces to mount the sensor amplifier.**
   Mounting it by inserting the bolts from the opposite side may damage the sensor amplifier.
3. **Do not pull the cable extending from the sensor amplifier or twist it at the amplifier's neck.**
   Forcibly pulling or twisting the cable in this manner may cause the sensor amplifier and/or the cable to break down.
4. **Be sure to ground the FG terminal with a resistance value of 100 Ω or less since the sensor amplifier case is common to the FG terminal.**
   Recommended crimping terminal: TMEN1.25-3 insulation-coated crimping terminal from NICHIFU Co., ltd.

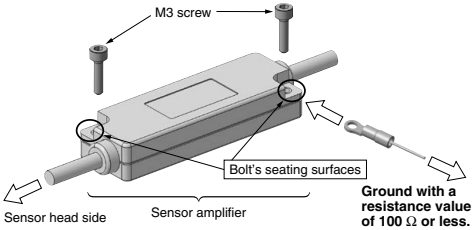

IZD10 Series
Specific Product Precautions 2

Be sure to read this before handling the products.
Refer to back page 50 for Safety Instructions and pages 512 and 513 for Electrostatic Sensors Precautions.

Mounting Precautions

1. Avoid placing any objects other than the object being measured or the sensor head cable close to the detection hole.

If any objects other than the object being measured are placed in the vicinity of the electrostatic sensor during sensor installation, the sensor will be affected by the objects thus placed and the sensor output will differ from the actual value.

2. To fix the sensor, use a bracket not coated with an insulating layer such as paint or a surface treatment material.

If any objects need to be placed near the electrostatic sensor, place them at a distance greater than the minimum installation clearances shown in the following table.

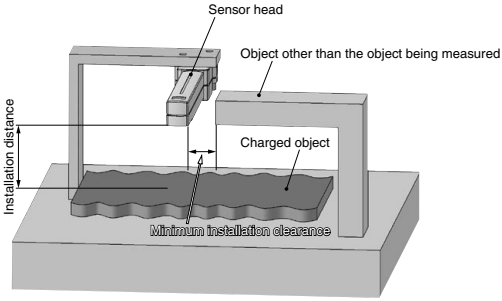

Installation distance (mm)	Min. installation clearance (mm)
10	20
20	40
25	45
30	55
40	65
50	75
60	90
70	100
75	105

3. Use the electrostatic sensor where there is no equipment nearby that generates electric or magnetic fields.

The electrostatic sensor is susceptible to electric and magnetic fields for reasons of its operating principle. If there are any current-carrying cables, transformers or radio equipment near the sensor head, the sensor may fail to correctly detect static electricity.

Timing Chart

The following is a timing chart where the installation distance (from the object being measured) of the electrostatic sensor is assumed to be 25 mm. (The installation distance is 50 mm for the IZD10-510.)

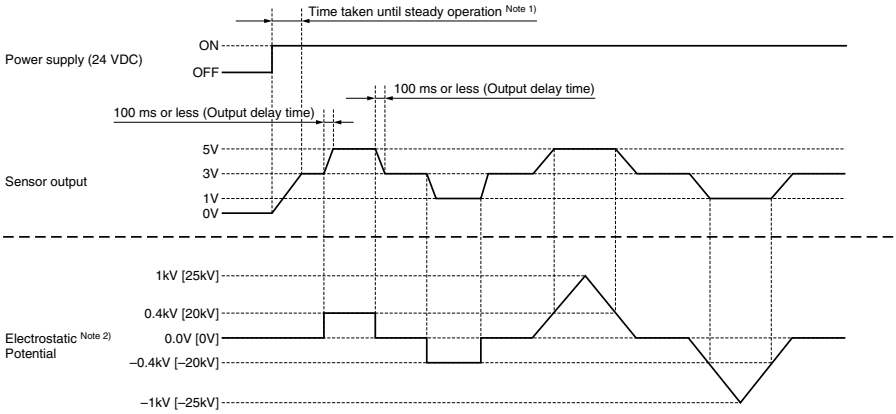

Note 1) The sensor is ready for operation approximately one second after power-on but may provide unsteady readings. It is therefore recommended that the sensor be used more than 10 minutes after power-on.
Note 2) The values are for the IZD10-110, while values in [ ] are for the IZD10-510.

IZE11 Series
Electrostatic Sensor Monitors Precautions

Be sure to read this before handling the products. Refer to back page 50 for Safety Instructions.

■ Electrostatic Sensor Monitor

Operating Environment

⚠ Warning

1. Our electrostatic sensor monitor are CE marked; however, they are not equipped with surge protection against lightning. Lightning surge countermeasures should be applied directly to system components as necessary.

2. Our electrostatic sensor monitor do not have an explosion proof rating. Never use in the presence of an explosive gas as this may cause a serious explosion.

Mounting

⚠ Caution

1. Mounting with a bracket

Mount a bracket to the body using two M3 x 5L mounting screws. Tightening torque for bracket mounting screw should be 0.5 to 0.7 N·m.

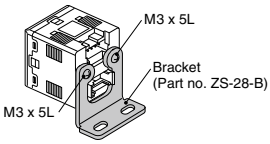

2. Mounting with panel mount adapter

Mount a panel mount adapter using two M3 x 8L mounting screws.

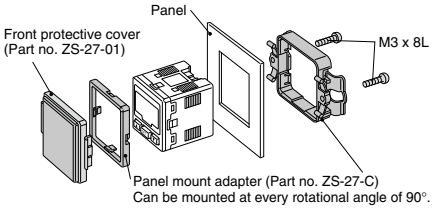

3. When removing the panel mount adapter

To remove the electrostatic sensor monitor with a panel mount adapter from user equipment, first remove the two mounting screws, then push the clips outward as shown in the figure and pull the monitor back towards you.

Removing the monitor otherwise may damage the monitor and/or the panel mount adapter.

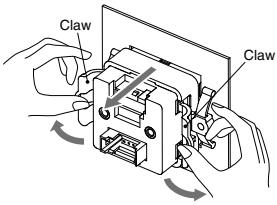

Wiring

⚠ Caution

1. Connection/Removal of Connector

- Insert the connector straight while pinching the lever, and then push the lever into the jack of the housing and lock it.
- Pull the connector straight out while applying pressure with your thumb to the lever and unhooking it from the jack.

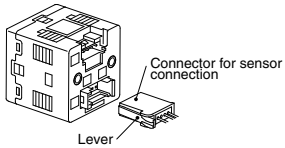

2. Connector pin no. of connection cable for power supply/output

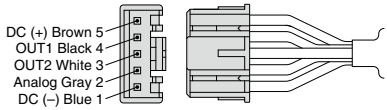

Setting

⚠ Warning

1. If not correctly set to the option specified for the connected sensor, the monitor will fail to display correct electrostatic potentials.

When initially setting up the monitor or connecting a sensor to the monitor, always make sure that the selected option and the electrostatic sensor agree with each other.

∗ The monitor is factory-set to the ±0.4 kV option.