REVISIONS		
REV.	DESCRIPTION	DATE
A	REDRAWN IN SW	2/25/2005

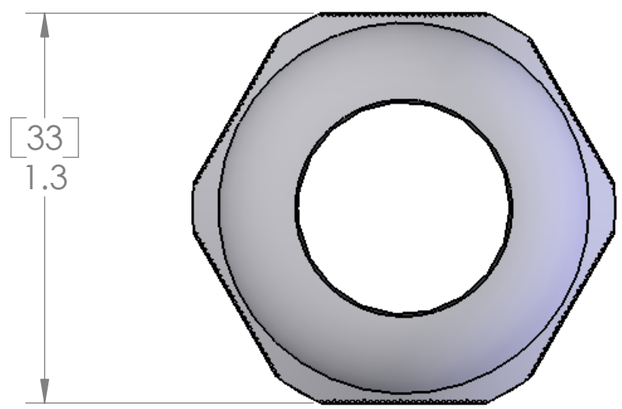

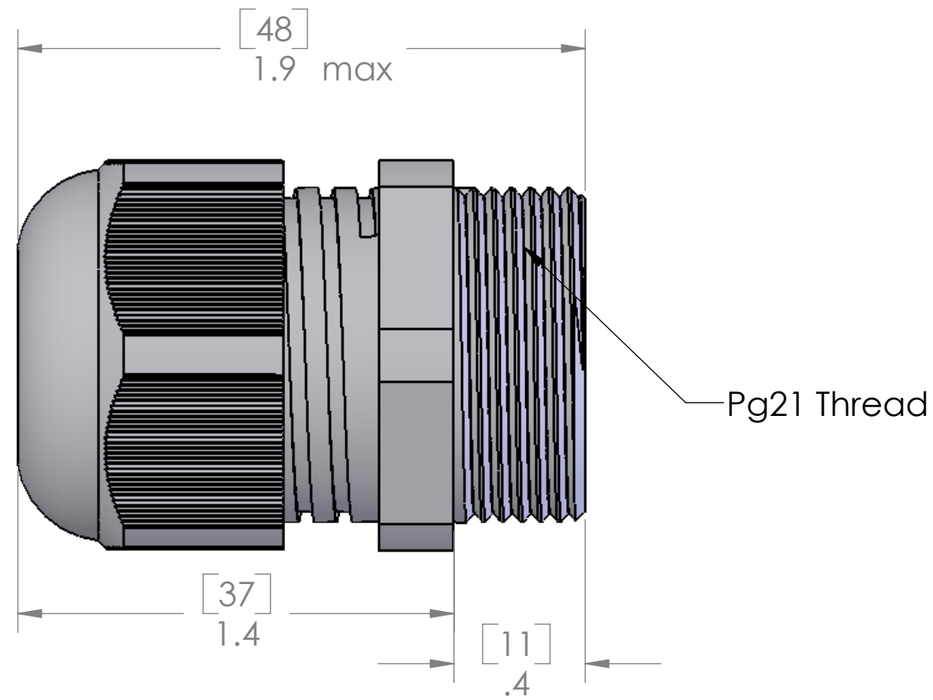

221PA/SW LOCK NUT INCLUDED BUT NOT SHOWN

NO O-RING IS NECESSARY TO OBTAIN IP68 SEAL. CRUSH RIBS ON THE UNDERSIDE OF HEX WILL PROVIDE THE SEAL.

SEAL RATED T0: IP68

MATERIALS	
BODY:	GRAY OR BLACK POLYAMIDE
GROMMET:	NEOPRENE

SPECIFICATIONS:	
TIGHTENING TORQUE:	7.5 Nm
TEMPERATURE:	-20°C - +100°C

APPROVALS:	
US	UL RECOGNIZED
CANADA	C-UL RECOGNIZED

PART NUMBER	COLOR	SEALING RANGE
PCG-21	GRAY	13-18mm
PCG-21R	GRAY	9-16mm
PCG-21-B	BLACK	13-18mm
PCG-21R-B	BLACK	9-16mm

PROPRIETARY AND CONFIDENTIAL
THE INFORMATION CONTAINED IN THIS DRAWING IS THE SOLE PROPERTY OF MENCOM CORPORATION. ANY REPRODUCTION IN PART OR AS A WHOLE WITHOUT THE WRITTEN PERMISSION OF MENCOM CORPORATION IS PROHIBITED.

SPECIFICATIONS

UNLESS OTHERWISE SPECIFIED:
DIMENSIONS ARE IN INCHES

MATERIAL

FINISH

DO NOT SCALE DRAWING

	NAME
DRAWN	BEM
CHECKED	
ENG APPR.	
MFG APPR.	
Q.A.	

COMMENTS:

MENCOM CORPORATION

TITLE:

SIZE	DWG. NO.	REV
B	PCG-21	A

SCALE: 2:1 WEIGHT: SHEET 1 OF 1