Wire Management Products

Cord and Cable Reels

Weatherproof Cord Reels

Features

- Durable, Corrosion Resistant Cast Aluminum Construction
- UL Type 4
- Multi-Position Guide Arm can be mounted in two different positions
- Positive Latch mechanism automatically maintains desired cord length
- Ratchet Lock can be disengaged in field for constant tension applications

Ordering Information

Description	UPC Number	Catalog Number
White Weatherproof Reel, UL Type 4, 45 Ft , #14/4 SOW, 15 A, 600 VAC	783585585963	**HBLW45144W**

Listings

cULus Listed

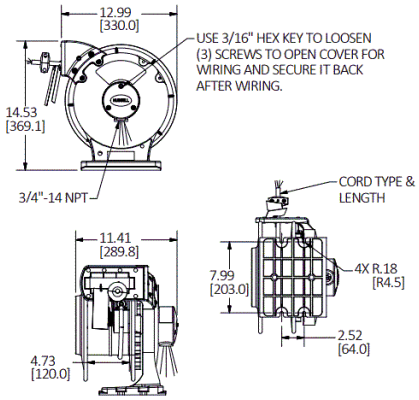

Specifications

Spool	Aluminum
Guide Frame	Thermoplastic
Cord	Copper
Internal Terminals	Copper Alloy
Ball Stopper	Thermoplastic
Fitting	Aluminum

Performance

Amperage
15 A

Max. Working Voltage
600V AC

Moisture Resistance
Dry, Indoor and Wet and Damp Outoor, Non-Hazardous Locations - UL Type 4

Number of Wires
4-Wire

Related Products

Pivot Base	HBLI340PB
Mounting Bracket	HBLIMB
Ball Stop	HBLI14BS

Online Resources

Customer Drawing
Customer Sales Drawings
eCatalog
Installation/Instruction Manual

Dimensions in Inches (mm)

Hubbell Wiring Device-Kellems • Hubbell Incorporated (Delaware) • 40 Waterview Drive • Shelton, CT 06484
Phone (800) 288-6000 • Fax (800) 255-1031 • Specifications subject to change without notice.

Wiring Device-Kellems