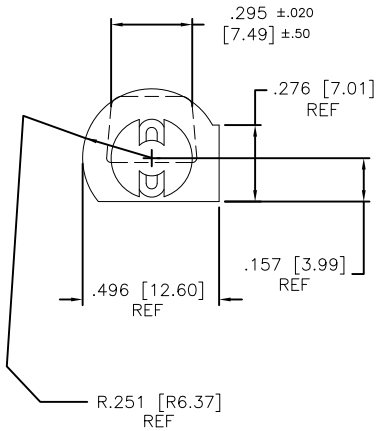

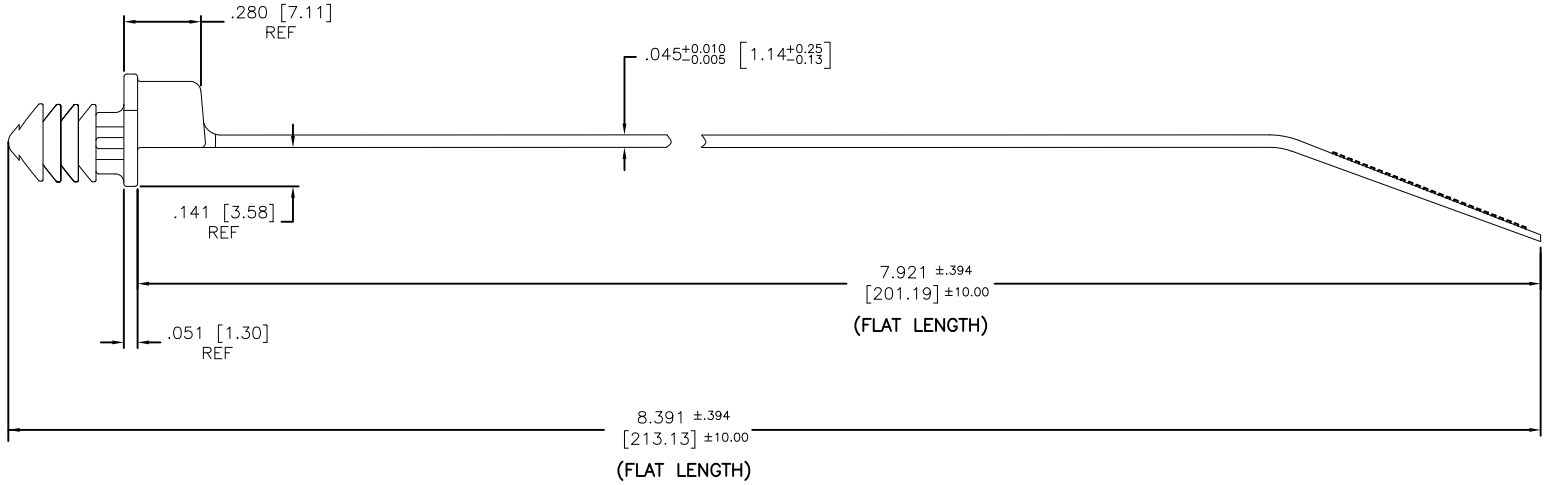

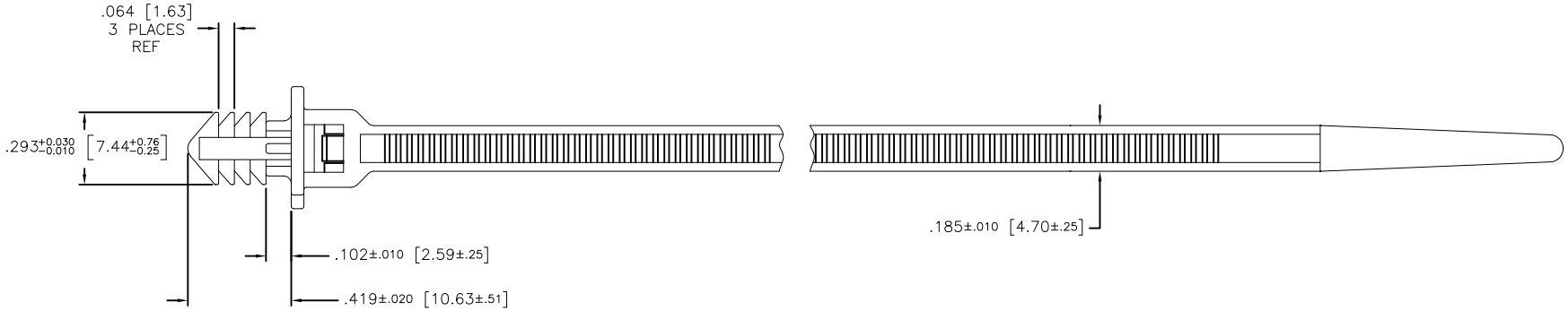

PART NUMBER DESCRIPTION

T50RTM25 — COLOR: CONTACT FACTORY FOR AVAILABLE COLORS.

REDUCED NO SCALE

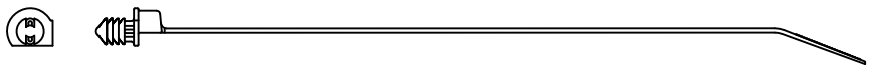

FULL SCALE

08

PANEL THICKNESS		MOUNTING HOLE DIA		BUNDLE DIA		TENSILE (LBS/N)
MAX	MIN	MAX	MIN	MAX	MIN	
.28	.052	.276	.246	2.000	.063	50
7.11	1.32	7.00	6.25	50.80	1.59	222.4

INVENTORS

HellermannTyton

ALL PROPRIETARY RIGHTS IN THE SUBJECT MATTER SHOWN ON THIS DRAWING ARE EXCLUSIVE PROPERTY OF HELLERMANNTYTON

name	date	city, state

NOTES

REVISION — DRAWING: level 08; date 07/12/12; by AAC; ECN # 012119; part level –

DIMENSIONS — TOLERANCES: .XXXX= ; .XXX= NOTED ; .XX= ; .X= ; ∠= ; unless otherwise specified; units inches/[mm]

PART — number T50RTM25_ ; phase PRODUCTION ; name T50RTM25 TREE MOUNT TIE ; material PA66HS or PA66HIR

DRAWING — FORMAT C version L ; CAD ACAD ; scale 3X ; computer file number CT\CST\1051001_08 ; previous number ; drawn G. GEIGER 04/24/94 ; checked KAC 07/12/12 ; approved ; type CUSTOMER ; sheet 1 of 1 ; number CT1051001CST