MALE END VIEW	FEMALE END VIEW
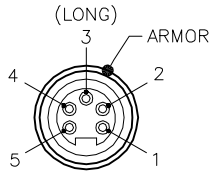	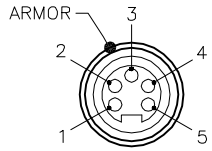
1 = WHITE 2 = RED 3 = GREEN/YELLOW 4 = ORANGE 5 = BLACK	1 = WHITE 2 = RED 3 = GREEN/YELLOW 4 = ORANGE 5 = BLACK

SPECIFICATIONS

CONTACT CARRIER MATERIAL/COLOR	TPU/YELLOW
MOLDED HEAD MATERIAL/COLOR	TPU/YELLOW
CONTACT MATERIAL/PLATING	BRASS/GOLD
COUPLING NUT MATERIAL/FINISH	STAINLESS STEEL/PASSIVATED
RATED CURRENT [A]	9.0 A
RATED VOLTAGE [V]	600 V
OUTER JACKET MATERIAL/COLOR	PVC/YELLOW
CONDUCTOR INSULATION MATERIAL	PVC
NUMBER OF CONDUCTORS [AWG]	5x18 AWG
TEMPERATURE RANGE	−30°C to +90°C (−22°F to +194°F)
PROTECTION CLASS	NEMA 1,3,4,4X,6P,12 & IECIP67,IP68,IP69,IP69K
CABLE RATINGS	UL TYPE 600 V MC 90°C DRY or 75°C WET or SUN RES or CSA FAS90 FT4

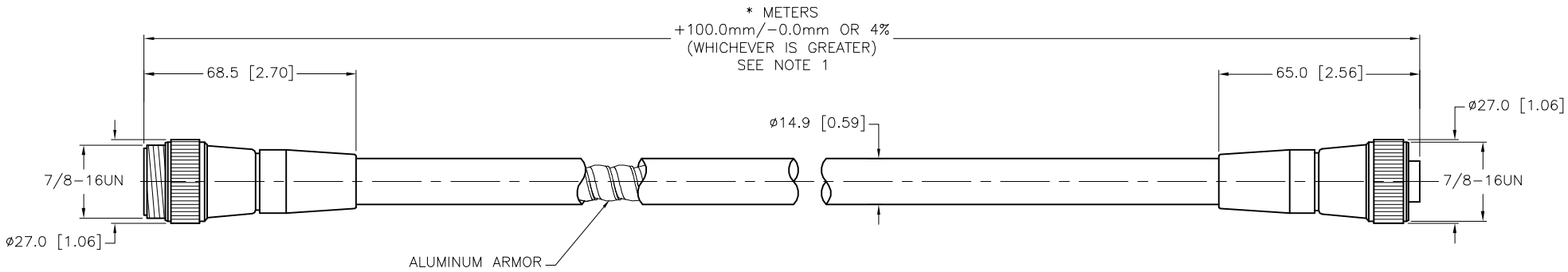

SOURCE DRAWING - FOR REFERENCE ONLY

NOTES:

1. "*" INDICATES CABLE LENGTH IN METERS. CONTACT TURCK TO ORDER SPECIFIC LENGTHS.

2. CABLE ARMOR IS CONNECTED TO THE COUPLING NUT.

REV	DESCRIPTION	BY	DATE	ECO NO.
I	UPDATE PROTECTION CLASS	CBM	04/13/21	76628

RELATED DOCUMENTS
1.
2.
3.
4.

3RD ANGLE PROJECTION

THIS DRAWING IS CONFIDENTIAL AND THE PROPERTY OF TURCK INC. USE OF THIS DOCUMENT WITHOUT WRITTEN PERMISSION IS PROHIBITED.

TURCK
3000 CAMPUS DRIVE
MINNEAPOLIS, MN 55441
1-800-544-7769
(763) 553-7300
(763) 553-0708 fax
www.turck.us

MATERIAL: SEE SPECIFICATIONS

FINISH: SEE SPECIFICATIONS

ALL DIMENSIONS DISPLAYED ON THIS DRAWING ARE FOR REFERENCE ONLY

CONTACT TURCK FOR MORE INFORMATION

DRFT: RDS | DATE: 03/19/03
APVD: | SCALE: 1=2.0

UNIT OF MEASUREMENT
MILLIMETER [INCH]
DO NOT SCALE THIS DRAWING

DESCRIPTION: RSV RKV 58A−*M

IDENTIFICATION NO.:

REV: |

FILE: 777001822

SHEET 1 OF 1