WIRING DIAGRAMS

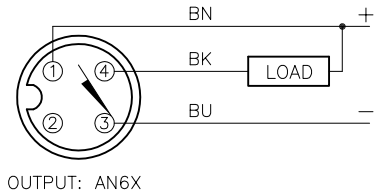

SHORT–CIRCUIT AND OVERLOAD PROTECTED

LOCKNUT LN–M30

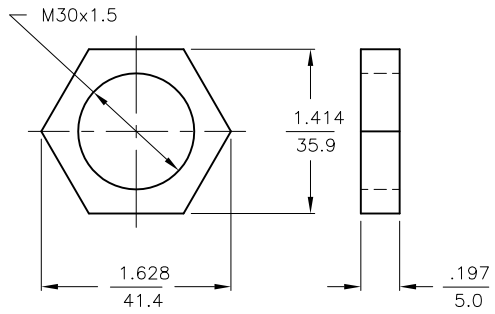

SPECIFICATIONS

RATED OPERATING DISTANCE	10mm = .394"
MOUNTING MODE	FLUSH
MIN. REPEAT ACCURACY	≤ 2%
TEMPERATURE DRIFT	≤ ±10% ≤ ±15%, ≤ −25°C v ≥ +70°C
HYSTERESIS	3–15%
OPERATING TEMPERATURE	−25°C to +70°C (−13°F to +158°F)
RATED OPERATIONAL VOLTAGE	10–30 VDC
RESIDUAL RIPPLE	≤ 10%
DC RATED OPERATIONAL CURRENT	≤ 200 mA
NO–LOAD CURRENT	≤ 15 mA
RESIDUAL CURRENT	≤ 0.1 mA
RATED INSULATION VOLTAGE	≤ 0.5 kV
SHORT–CIRCUIT PROTECTION	YES
MAX. VOLTAGE DROP	≤ 1.8 V
WIRE BREAKAGE PROTECTION	INCORPORATED
REVERSE POLARITY PROTECTION	INCORPORATED
OUTPUT FUNCTION	3–WIRE, NORMALLY OPEN, NPN
MAX. SWITCHING FREQUENCY	≤ 0.5 kHz
HOUSING MATERIAL	METAL, BRASS/CHROME–PLATED
ACTIVE FACE MATERIAL	PLASTIC, LCP–GF30
END CAP MATERIAL	PLASTIC, EPTR
CABLE	ø5.2, PVC
VIBRATION RESISTANCE	55 Hz, 1 mm AMPLITUDE (IN ALL 3 PLANES)
SHOCK RESISTANCE	30 g, 11 ms
DEGREE OF PROTECTION	IP67
SWITCHING STATUS INDICATION	LED, YELLOW

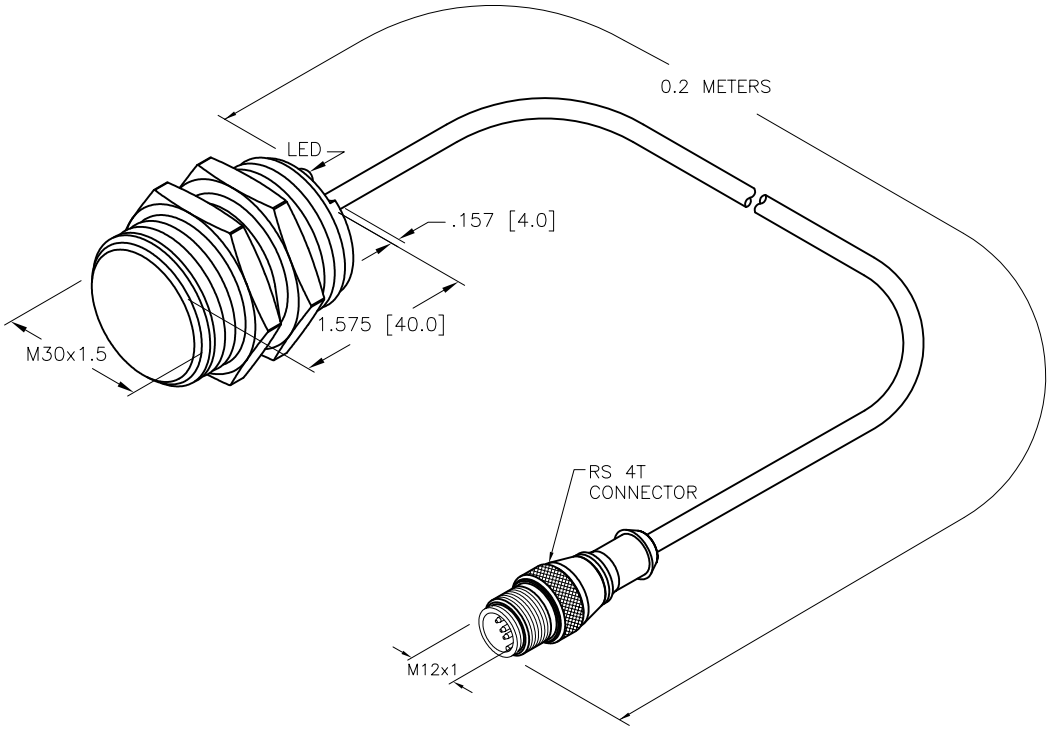

SOURCE DRAWING - FOR REFERENCE ONLY

RELATED DOCUMENTS	3RD ANGLE PROJECTION	THIS DRAWING IS CONFIDENTIAL AND THE PROPERTY OF TURCK INC. USE OF THIS DOCUMENT WITHOUT WRITTEN PERMISSION IS PROHIBITED.	TURCK	3000 CAMPUS DRIVE MINNEAPOLIS, MN 55441 1–800–544–7769 (763) 553–7300 (763) 553–0708 fax www.turck.us
1. 2. 3. 4.				
MATERIAL	ALL DIMENSIONS DISPLAYED ON THIS DRAWING ARE FOR REFERENCE ONLY	DRFT KMY / DATE 03/12/12	DESCRIPTION	BI10–G30K–AN6X–0.2M–RS4T
		APVD J.M. / SCALE 1=1.5		
FINISH	CONTACT TURCK FOR MORE INFORMATION	UNIT OF MEASUREMENT **INCH [MILLIMETER]** DO NOT SCALE THIS DRAWING	IDENTIFICATION NO. 4671693	REV B
			FILE: 4671693	SHEET 1 OF 1

REV	DESCRIPTION	BY	DATE	ECO NO.
B	UPDATE ID NUMBER PER HARMONIZATION PROJECT	CBM	11/06/17	