RK 4.4T-20
Actuator and Sensor Cordset – Connection Cable

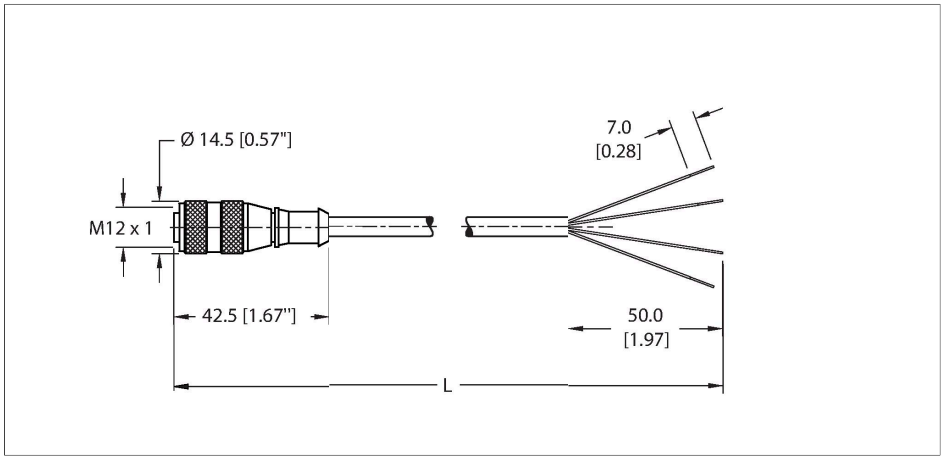

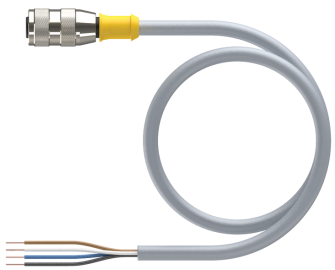

Technical data

Type	RK 4.4T-20
ID	U2172-2
Connector A	Female, M12 × 1, Straight, A-code
Design specification	Acc. to IEC 61076-2-101
Number of contacts	4
Contacts	Bronze, CuSn, Gold-plated
Contact carriers	Plastic, TPU, Black
Connector body	Plastic, TPU, Yellow
Coupling nut	Brass, CuZn, Nickel-plated
Connector seal	O-ring, Plastic, FKM/FPM
Tightening torque (range)	0.8 … 1 Nm (note max. torque of mating connector!)
Mechanical life	> 100 Mating cycles
Pollution degree	3
Protection class (When coupled)	IP68, IP69K
	NEMA: 1, 3, 4, 6P
Cable data	
Cable ID	RF50516
Total number of conductors	4
Cable diameter	Ø 5.33 mm
Length (L)	20 m, (+50mm or 4% of length/-0.0, Whichever is greater)
Cable jacket	PVC, Gray
Conductor diameter	0.054 "
Conductor material	TC (tinned copper)

Features

IP67/IP68
IP69/IP69K
DEGREE OF PROTECTION

- M12, Female, Straight, 4-pin, IP67, IP68
- Instrumentation Tray Cable
- Gray PVC jacket, 4X22 AWG
- Sunlight Resistant
- -40 Cold Bend Rating
- Oil Resistant
- Flame Ratings: UL 1685 FT4, UL1061, CSA FT4
- Flexlife® and C-Track Approved

Cable cross section

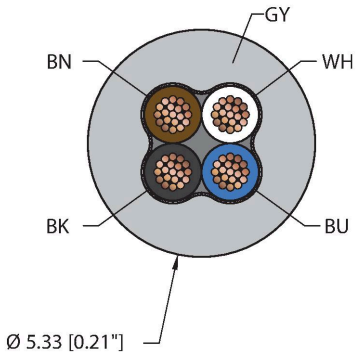

Contact assignment

RK 4.4T-20| 11/29/2022 20-30 | technical changes reserved

Technical data

Conductor insulation material	PVC
Conductor size	4 x 22 AWG [Similar to 0.34 mm²]
Number of strands x O.D.	19 x 0.0058 "
Conductor colors	BN, WH, BU, BK
Electrical properties at +20 °C	
Rated voltage	250 V
Current	4 A
Mechanical and chemical properties	
Bending radius (static)	≥ 5 x Ø
Bending radius (dynamic)	≥ 10 x Ø
UL cold bend rating	-40 °C
Flex rating 20 x Ø	10 million cycles*
	*When properly installed @ 20°C, 50%RH, and a cycle speed of ≤0.5 cycles per second.
C-Track	Yes
Ambient temperature range (static)	-40 °C…+105 °C
Ambient temperature range (dynamic)	5 °C…+105 °C
Temperature range (installation)	-10 °C…+105 °C
Approval	
Approvals	UL 2238 CSA C22.2 No. 182.3 CE UKCA RoHS
Note	
	- Flex ratings may be reduced if used in extreme temperatures, exposure to certain chemicals, operating above the rated cycle speed, or operating below the rated cable bend radius.
	- We reserve the right to make technical alterations without prior notice.

Connector A

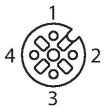

Circuit Diagram

Accessories

BS8141-0 **69010**

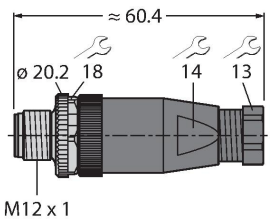

Field-wireable male connector, M12 × 1, straight, 4-pin, screw terminal connection, cable feedthrough 4.0 to 6.0 mm, core cross-section/terminal capacity 0.14 to 0.75 mm², plastic housing, metal retaining screw

TORQUE-WRENCH-SET-M12-LEGACY **A900153**

Adjustable torque driver to connect to a Ø15mm knurl. Compatible with the redesigned and legacy M12 cordsets. Includes (1) adjustable torque driver, (1) adjustment tool, (1) 1/4"square to 4mm hex adaptor bit, and (1) Ø15mm spring loaded clamp bit

RK 4.4T-20| 11/29/2022 20-30 | technical changes reserved

Accessories

M12-CORDSETS-MOUNTING-CLIP-(10/BAG)	100016882

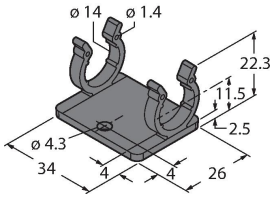

10 Pack of black mounting clips and M4x8mm mounting screws, used to secure cable to cable connection points.

RK 4.4T-20 | 11/29/2022 20-30 | technical changes reserved