MALE END VIEW	FEMALE END VIEW (J1)	FEMALE END VIEW (J2)

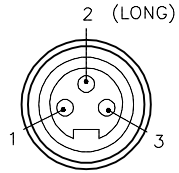

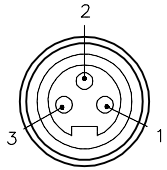

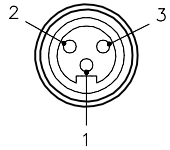

SPECIFICATIONS

CONTACT CARRIER MATERIAL/COLOR	PVC/BLACK
MOLDED MATERIAL/COLOR	PVC/RED
CONTACT MATERIAL/PLATING	BRASS or COPPER/GOLD
COUPLING NUT MATERIAL/FINISH (P1,J1)	ALUMINUM/CLEAR-ANODIZED
COUPLING NUT MATERIAL/PLATING (J2)	BRASS/NICKEL
RATED CURRENT [A]	40 A COMBINED, 21 A DROP
RATED VOLTAGE [V]	600 V
TEMPERATURE RATING	-40°C to +90°C (-40°F to +194°F)
PROTECTION CLASS	MEETS NEMA 1,3,4,6P AND IEC IP67

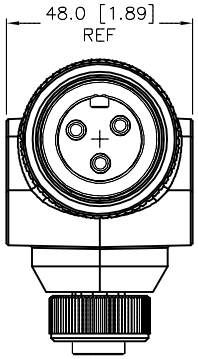

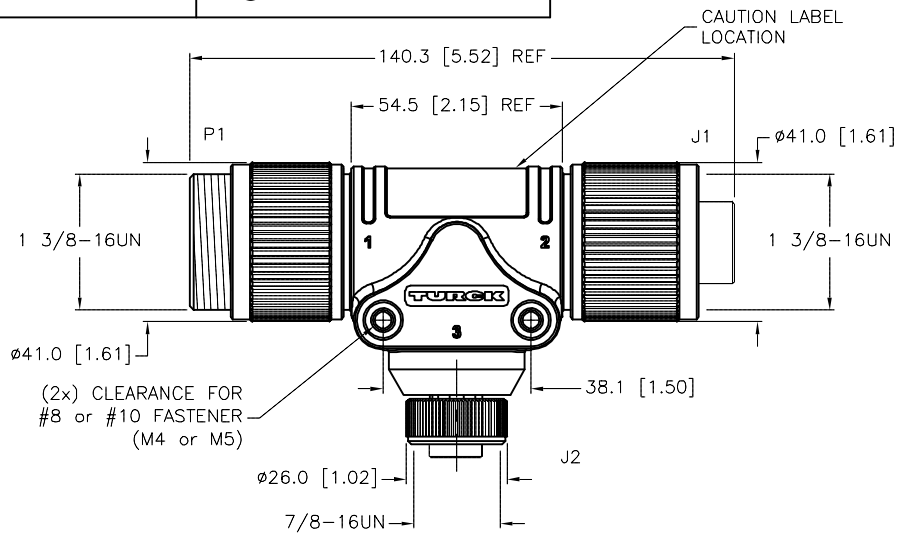

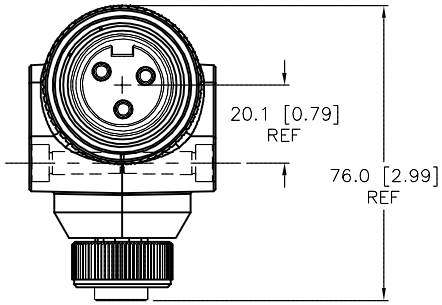

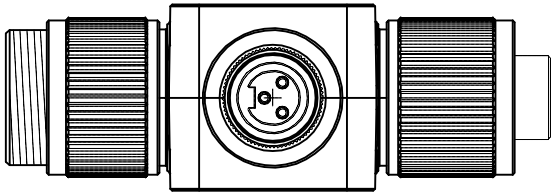

WIRING DIAGRAM

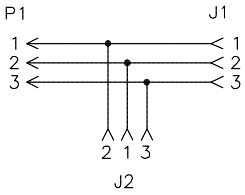

CAUTION:
RISK OF ELECTRICAL SHOCK
DO NOT DISCONNECT UNDER LOAD

SOURCE DRAWING - FOR REFERENCE ONLY

NOTES:

1. "/S1055" DESIGNATES RED MOLDED PLUG BODY.

REV	DESCRIPTION	BY	DATE	ECO NO.
C	UPDATED RATED CURRENT RATING	ER	04/26/19	69364

RELATED DOCUMENTS
1.
2.
3.
4.

3RD ANGLE PROJECTION

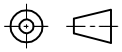

THIS DRAWING IS CONFIDENTIAL AND THE PROPERTY OF TURCK INC. USE OF THIS DOCUMENT WITHOUT WRITTEN PERMISSION IS PROHIBITED.

TURCK

3000 CAMPUS DRIVE
MINNEAPOLIS, MN 55441
1-800-544-7769
(763) 553-7300
(763) 553-0708 fax
www.turck.us

MATERIAL: SEE SPECIFICATIONS

FINISH: SEE SPECIFICATIONS

ALL DIMENSIONS DISPLAYED ON THIS DRAWING ARE FOR REFERENCE ONLY

CONTACT TURCK FOR MORE INFORMATION

DRFT: RDS | DATE: 07/10/13
APVD: E.S. | SCALE: 1=2.0

UNIT OF MEASUREMENT
MILLIMETER [INCH]
DO NOT SCALE THIS DRAWING

DESCRIPTION: GSDA/GKDA/RKM 34/S1055

IDENTIFICATION NO.: U2-21809 | REV: C

FILE: U2-21809 | SHEET 1 OF 1

Approved 05/01/2019, work order #190218 by L.H.