Extension Module for Use with Function Module or with Programmable Gateway
BL ident® RFID Module for Connection of 2 Read/Write heads (HF/UHF)
BL67-2RFID-A

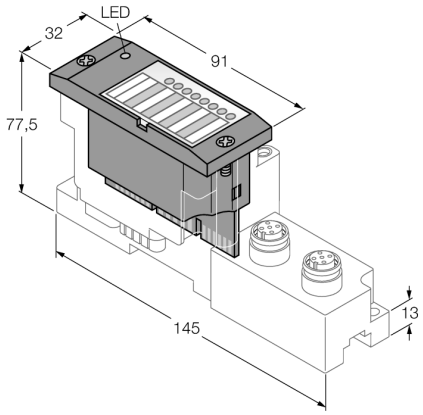

Functional principle

BL67 electronic modules are plugged on the purely passive base modules which in turn are connected to the field devices. The separation of connection level and electronics simplifies maintenance considerably. Flexibility is enhanced because the user can choose between base modules with different connection technologies.

The electronic modules are completely independent of the higher level fieldbus through the use of gateways.

Type designation	BL67-2RFID-A
Ident-No.	6827225
Number of channels	2
Supply voltage	24 VDC
Nominal voltage V_i	24 VDC
Nominal current from field supply	≤ 100 mA
Nominal current from module bus	≤ 30 mA
Power dissipation, typical	≤ 1 W
Transmission rate	115.2 kbps
Cable length	50 m
Electrical isolation	isolation of electronics and field level via optocouplers
Output connectivity	M12
Sensor supply	0.5 A per channel, short-circuit proof
Dimensions (W x L x H)	32 x 91 x 59mm
Approvals	CE, cULus
Operating temperature	-40…+70 °C
Storage temperature	-40…+85 °C
Relative humidity	5 to 95 % (internal), Level RH-2, no condensation (at 45 °C storage)
Vibration test	acc. to EN 61131
Extended vibration resistance	
- up to 5 g (at 10 to 150 Hz)	for mounting on DIN rail no drilling according to EN 60715, with end bracket
- up to 20 g (at 10 up to 150 Hz)	for mounting on base plate or machinery Therefore every second module has to be mounted with two screws each.
Shock test	acc. to IEC 68-2-27
Drop and topple	acc. to IEC 68-2-31 and free fall to IEC 68-2-32
Electromagnetic compatibility	acc. to EN 61131-2
Protection class	IP67
MTTF	212 years acc. to SN 29500 (Ed. 99) 40 °C
Tightening torque fixing screw	0.9…1.2 Nm

Edition • 2020-01-31T11:45:56+01:00

 Hans Turck GmbH & Co.KG • D-45472 Mülheim an der Ruhr • Witzlebenstraße 7 • Tel. 0208 4952-0 • Fax 0208 4952-264 • more@turck.com • www.turck.com

Extension Module for Use with Function Module or with Programmable Gateway
BL ident® RFID Module for Connection of 2 Read/Write heads (HF/UHF)
BL67-2RFID-A

Compatible base modules

Dimension drawing	Type	Pin configuration
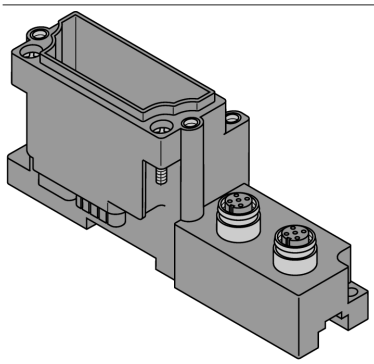	**BL67-B-2M12** 6827186 2 x M12, 5-pole, female, a-coded **Comments** Matching connection cable (for example): RK4.5T5-RS4.5T/S2500 Ident-No. 6699201	Connector …/S2500 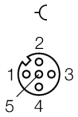 1 = BN (+) 2 = BK (Data) 3 = BU (GND) 4 = WH (Data) 5 = shield Connector …/S2501 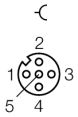 1 = BN (+) 2 = WH (Data) 3 = BU (GND) 4 = BK (Data) 5 = shield Connectors …/S2503 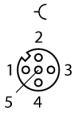 1 = RD (+) 2 = BU (Data) 3 = BK (GND) 4 = WH (Data) 5 = shield

Edition • 2020-01-31T11:45:56+01:00

 Hans Turck GmbH & Co.KG • D-45472 Mülheim an der Ruhr • Witzlebenstraße 7 • Tel. 0208 4952-0 • Fax 0208 4952-264 • more@turck.com • www.turck.com

LED display

LED	Color	Status	Meaning
D		OFF	No error message or diagnostics active.
	RED	ON	Failure of module bus communication. Check if more than 2 adjacent electronic modules are pulled. Relevant modules are located between gateway and this module.
	RED	FLASHING (0.5 Hz)	Upcoming module diagnostics
RW0 / RW1		OFF	No tag present, no diagnostics active
	GREEN	ON	Tag present
	GREEN	FLASHING (2 Hz)	Data communication from / to tag active
	RED	ON	Error in the R/W head
	RED	FLASHING (2 Hz)	Short circuit in the transceiver supply

Compatible gateways

Ident. no.	Type	Communication	Version and higher	Application
6827232	BL67-GW-DPV1	PROFIBUS-DP	FW 1.10	PLC systems with Profibus DPV1 master and PIB (Proxy Ident Block) function block. The PIB is required for the control of the RFID system and uses internally acyclic services.
6827228	BL67-GW-EN-PN	PROFINET IO	FW 1.0.0.5	PLC systems with PROFINET IO master and PIB (Proxy Ident Block) function block. The PIB is required for the control of the RFID system and uses internally acyclic services.

Compatible CODESYS programmable gateways

Ident. no.	Type	Communication	Version and higher	Application
6827241	BL67-PG-EN	Modbus TCP	FW 1.3.0.0	PLC systems with Modbus TCP master or PC-based solution (e.g.visualization) using Modbus TCP driver software.
6827246	BL67-PG-EN-IP	EtherNet/IP™	FW 1.6.0.1	PLC systems with EtherNet/IP™ scanner (master). A function block is not required for the higher-level PLC.
6827240	BL67-PG-DP	PROFIBUS-DP	FW 1.3.0.0	PLC systems with PROFIBUS-DP master. A function block is not required for the higher-level PLC.

The CODESYS programmable gateways can be used for quick and decentralized pre-processing or as a stand-alone solution. The application of the CODESYS PIB (Proxy Ident Block) function block is obligatory in any case. The library with the PIB is included in the CODESYS target file.

In addition to the specific fieldbus interface, all CODESYS programmable gateways offer further Ethernet-based communication possibilities:

Ident. no.	Type	Communication	Version and higher	Application
-	all PGs	Ethernet TCP/IP	FW 1.3.0.0	PC-based applications with transparent Ethernet TCP/IP communication.
-	all PGs	Ethernet UDP/IP	FW 1.3.0.0	PC-based applications with transparent Ethernet UDP/IP communication.
-	all PGs	OPC	FW 1.3.0.0	PC-based applications with OPC client. A license free-CODESYS OPC server is required.
-	all PGs	SymARTI	FW 1.3.0.0	Exchange of global network variables between CODESYS programmable devices and control systems via Ethernet.
-	all PGs	DDE	FW 1.3.0.0	CODESYS features a DDE (dynamic data exchange) interface. This way, CODESYS can export the contents of control variables and IEC addresses to other applications such as Excel via the DDE interface.

Edition • 2020-01-31T11:45:56+01:00